180° Angular Style Air Gripper

Series MHY2/MHW2

Cam Style / Rack & Pinion Style

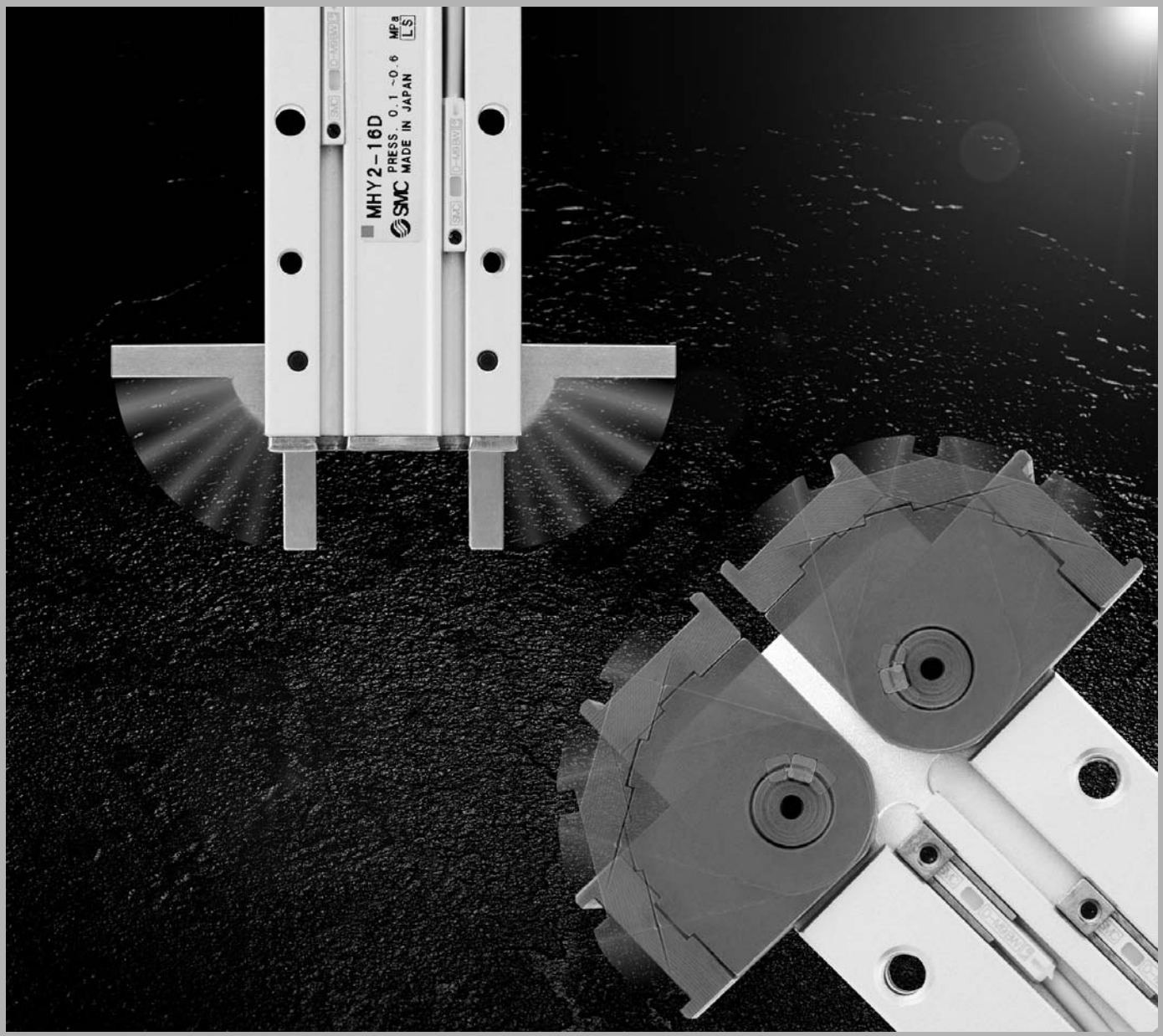

180° Angular Style Air Gripper

Cam Style Rack & Pinion Style

Series MHY2/MHW2

Series MHY2/Cam Style

Light and compact size in small bore sizes

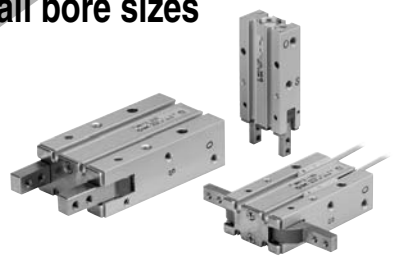

Model	Bore size (mm)	Gripping moment * (N·m)	Over length L (mm) L	Mass (g)
MHY2-10D	10	0.16	71	70
MHY2-16D	16	0.54	84	150
MHY2-20D	20	1.10	106	320
MHY2-25D	25	2.28	131	560

* At the pressure of 0.5 MPa

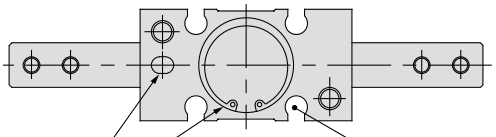

Auto switch mounting at 4 locations

Improved mounting repeatability

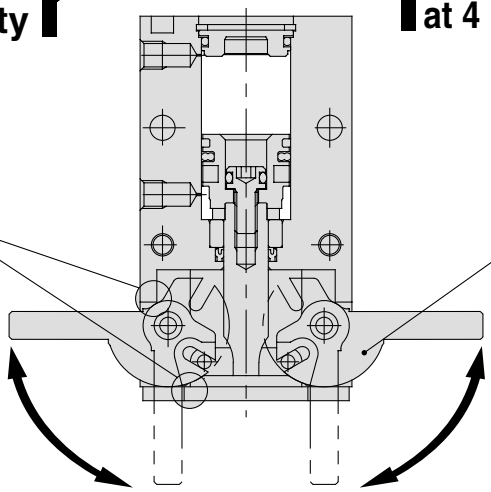

Stainless steel fingers are standard.

Resistance to dusty environments

Reduced opening sizes helps prevent foreign objects from entering.

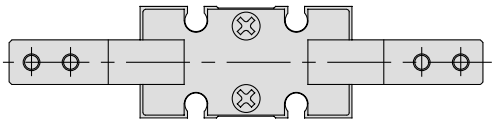

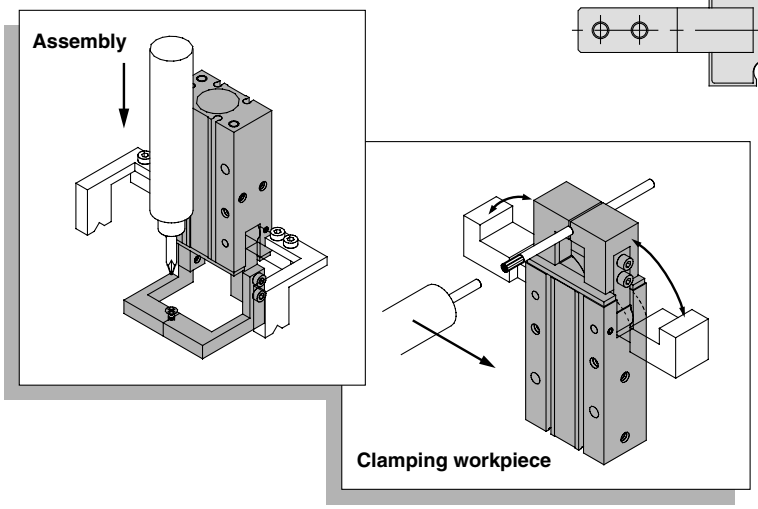

Series Variations

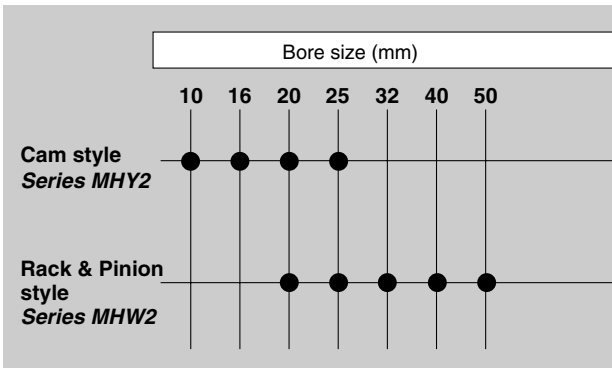

Series MHW2/Rack & Pinion Style

Unique seal design allows shorter total length construction and constant grippng force when opening and closing fingers. (PAT.PEND)

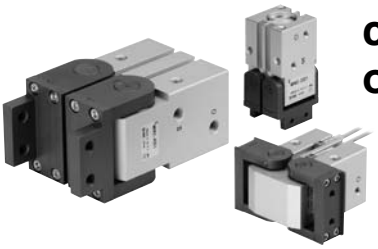

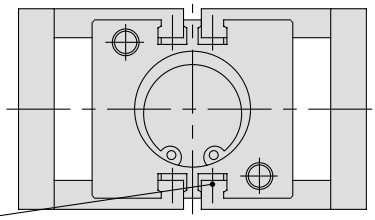

Model	Bore size (mm)	Gripping moment * (N·m)	Over length L(mm)	Mass (g)
MHW2-20D	20	0.30	68	300
MHW2-25D	25	0.73	78	510
MHW2-32D	32	1.61	93.5	905
MHW2-40D	40	3.70	117.5	2135
MHW2-50D	50	8.27	154	5100

∗ At the pressure of 0.5 MPa

Auto switch mounting at 4 locations

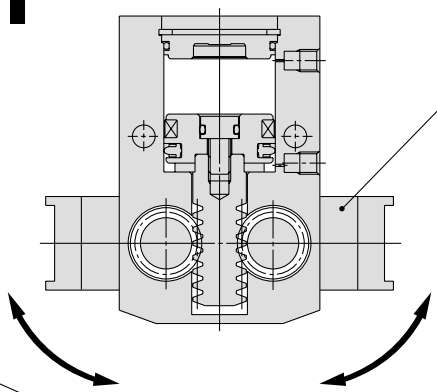

Two finger styles available.

Flat finger type **Right angle finger type**

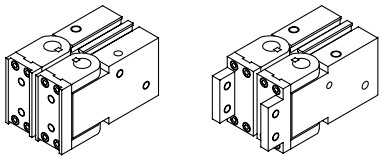

Key connection is ideal for impact resistance.

Key connection between finger and shaft prevents finger angle slippage during impact.

Dustproof construction

Seal arrangement protects gripper from harsh dusty environments.

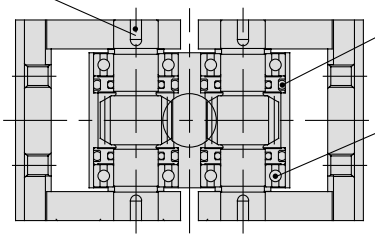

Bearings are standard.

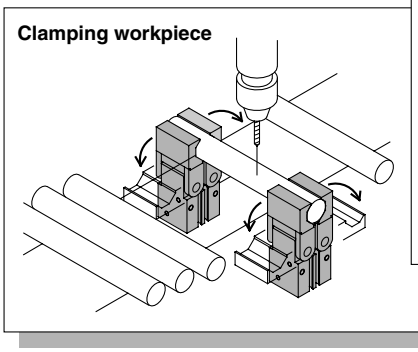

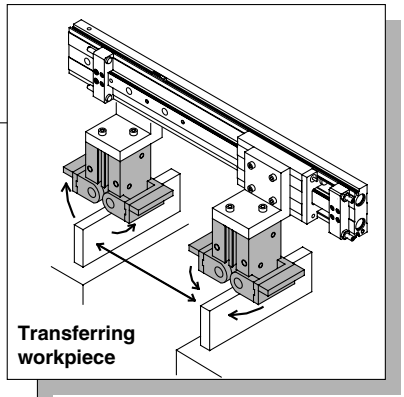

INDEX

Model Selection

Model Selection

Selection Procedure

Step 1 Confirmation of gripping force → **Step 2** Confirmation of gripping point → **Step 3** Confirmation of moment of inertia of attachments

Step 1 Confirmation of Gripping Force

Confirmation of conditions → Calculation of required gripping force → Selection of model from gripping force graph

Example

Workpiece weight: 0.05 kg →

Guidelines for the selection of the gripper with respect to component weight

- Although conditions differ according to the workpiece shape and the coefficient of friction between the attachments and the workpiece, select a model that can provide a gripping force of 10 to 20 times the workpiece weight, or more.
- If high acceleration, deceleration or impact forces are encountered during motion, a further margin of safety should be considered.

Example) For setting the gripping force to be at least 20 times the work weight;

Required gripping force

= 0.05 kg x 20 x 9.8 m/s² = 10 N min.

Gripping point L = 35 mm →

Operating pressure: 0.6 MPa →

MHY2-16D

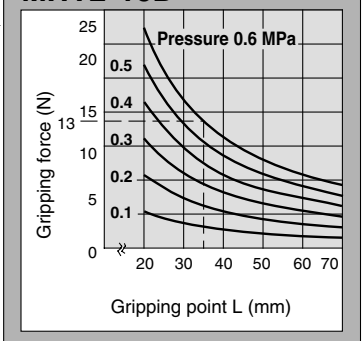

- When **MHY2-16D** is selected, the gripping force is determined to be 13 N according to the gripping point distance (L = 35 mm) and the pressure (0.6 MPa).
- The gripping force is 26 times the workpiece weight and therefore satisfies a gripping force setting value of 20 times or more.

Effective Gripping Force

Series MHY2/MHW2 Double Acting

- Indication of effective grippng force
  The effective gripping force shown in the graphs to the right is expressed as F, which is the impellent force of one finger, when both fingers and attachments are in full contact with the workpiece as shown in the figure below.

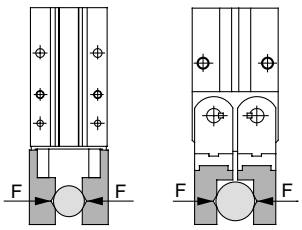

External grip

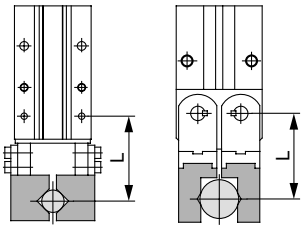

MHY2-10D

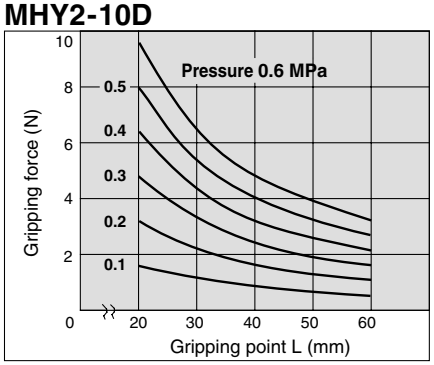

MHY2-20D

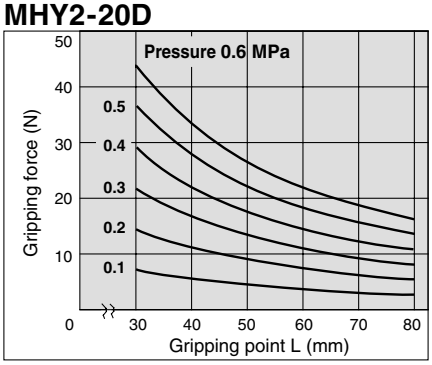

MHY2-16D

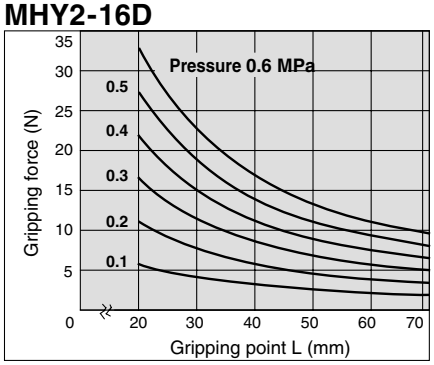

MHY2-25D

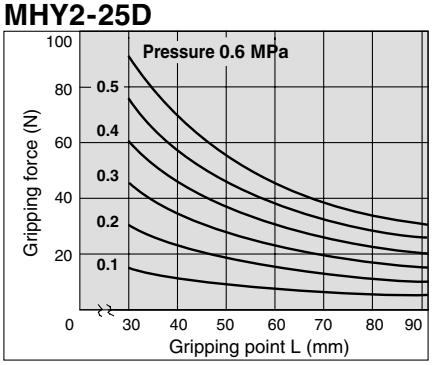

MHW2-20D

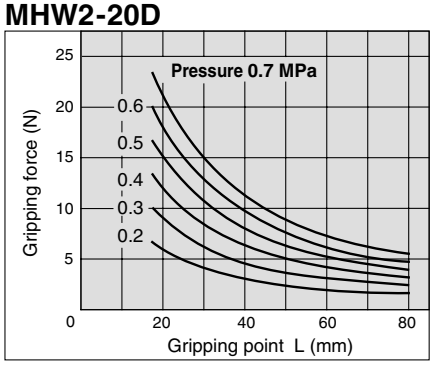

MHW2-32D

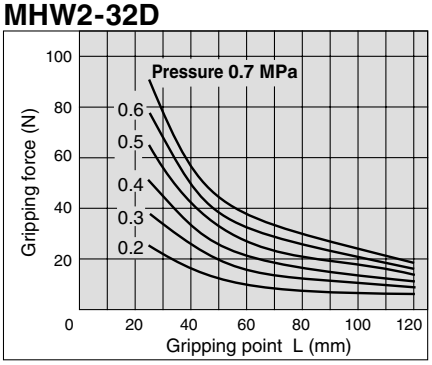

MHW2-50D

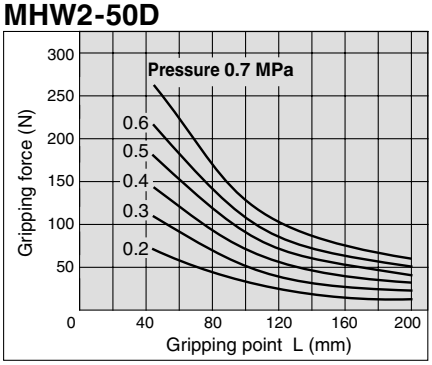

MHW2-25D

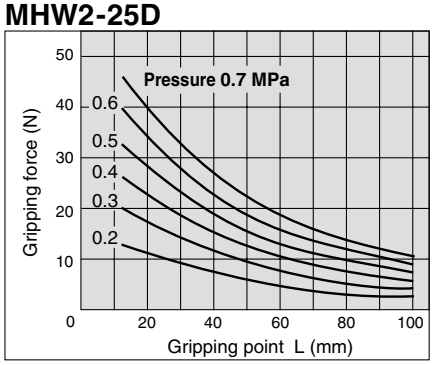

MHW2-40D

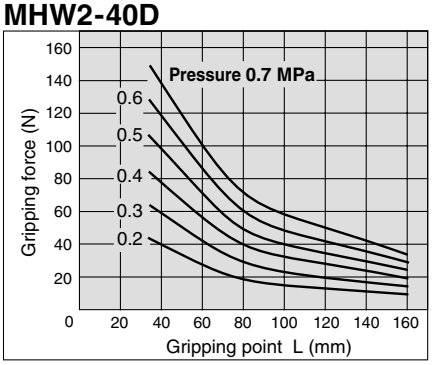

Step 2 Confirmation of Gripping Point

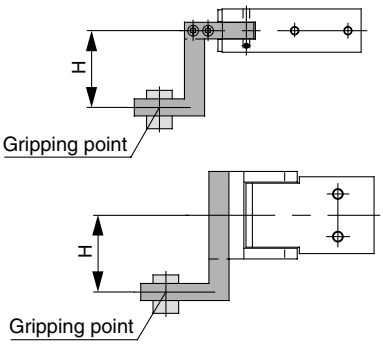

MHY

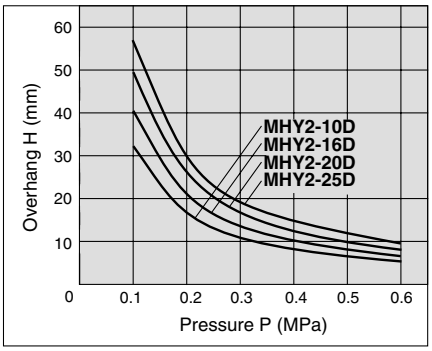

MHW

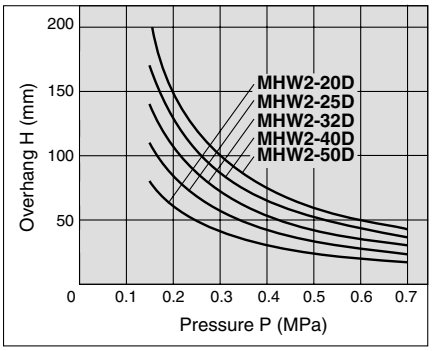

- Workpiece should be held at a point within the range of overhanging distance (H) for a given pressure indicated in the tables on the right.
- When the workpiece is held at a point outside of the recommended range for a given pressure, it may cause adverse effect on the product life.

Model Selection

Step 3 Confirmation of Moment of Inertia of Attachments

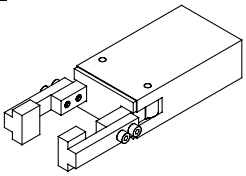

Confirm the moment of inertia for the attachment at one side. Calculate the moment of inertia for A and B separately as shown in the figures on the right.

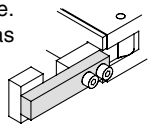

A part

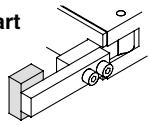

B part

Procedure	Calculation	Calculation example
1. Check the operating conditions, dimensions of attachment, etc.	**A part** 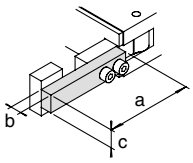 **B part** 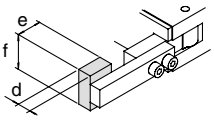 	Operating model: MHY2-16D Opening time: 0.15 s a = 40 (mm) b = 7 (mm) c = 8 (mm) d = 5 (mm) e = 10 (mm) f = 12 (mm)
2. Calculate the moment of inertia of attachment.	**A part** 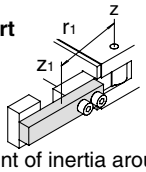 Calculation of weight m_1 = a x b x c x Specific gravity Moment of inertia around Z_1 axis $I_{Z1} = \{m_1(a^2 + b^2)/12\} \times \frac{10^{-6}}{*}$ Moment of inertia around Z axis $I_A = I_{Z1} + m_1 r_1^2 \times \frac{10^{-6}}{*}$ **B part** 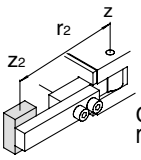 Calculation of weight m_2 = d x e x f x Specific gravity Moment of inertia around Z_2 axis $I_{Z2} = \{m_2(d^2 + e^2)/12\} \times \frac{10^{-6}}{*}$ Moment of inertia around Z axis $I_B = I_{Z2} + m_2 r_2^2 \times \frac{10^{-6}}{*}$ Total moment of inertia $I = I_A + I_B$ (* Constant for unit conversion)	Material of attachment: Aluminum alloy (Specific gravity = 2.7) r_1 = 37 (mm) $m_1 = 40 \times 7 \times 8 \times 2.7 \times 10^{-6}$ $= 0.006$ (kg) $I_{Z1} = \{0.006 \times (40^2 + 7^2)/12\} \times 10^{-6}$ $= 0.8 \times 10^{-6}$ (kg·m²) $I_A = 0.8 \times 10^{-6} + 0.006 \times 37^2 \times 10^{-6}$ $= 9.0 \times 10^{-6}$ (kg·m²) r_2 = 47(mm) $m_2 = 5 \times 10 \times 12 \times 2.7 \times 10^{-6}$ $= 0.002$ (kg) $I_{Z2} = \{0.002 \times (5^2 + 10^2)/12\} \times 10^{-6}$ $= 0.02 \times 10^{-6}$ (kg·m²) $I_B = 0.02 \times 10^{-6} + 0.002 \times 47^2 \times 10^{-6}$ $= 4.4 \times 10^{-6}$ (kg·m²) $I = 9.0 \times 10^{-6} + 4.4 \times 10^{-6}$ $= 13.4 \times 10^{-6} = 0.13 \times 10^{-4}$ (kg·m²)
3. Determine the allowable moment of inertia from the graph.	**MHY2-16D** 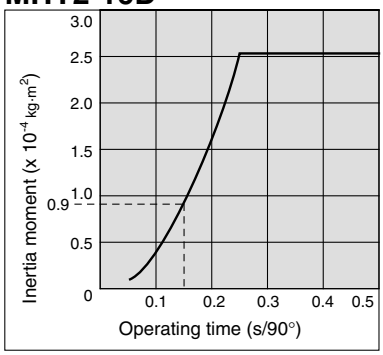 	The moment of inertia is determined to be 0.9×10^{-4} (kg·m²) according to the operating time (0.15 s) from the graph to the left.
4. Confirm the moment of inertia of one attachment is within the allowable range.	Moment of inertia of attachment < Allowable moment of inertia	0.13×10^{-4} (kg·m²) < 0.9×10^{-4} (kg·m²) Possible to use this model MHY2-16D completely.

Symbol

Symbol	Definition	Unit
Z	Finger rotation axis	—
Z_1	Axis on the center gravity of A part of attachment and parallel to Z	—
Z_2	Axis on the center gravity of B part of attachment and parallel to Z	—
I	Total moment of inertia for attachment	kg·m²
I_{Z1}	Inertia moment around the Z_1 axis of A part of attachment	kg·m²
I_{Z2}	Inertia moment around the Z_2 axis of B part of attachment	kg·m²

Symbol	Definition	Unit
I_A	Moment of inertia around the Z axis of A part of attachment	kg·m²
I_B	Moment of inertia around the Z axis of B part of attachment	kg·m²
m_1	Weight of A part of attachment	kg
m_2	Weight of B part of attachment	kg
r_1	Distance between Z and Z1 axis	mm
r_2	Distance between Z and Z2 axis	mm

Allowable Range of Moment of Inertia of Attachment

MHY2-10D

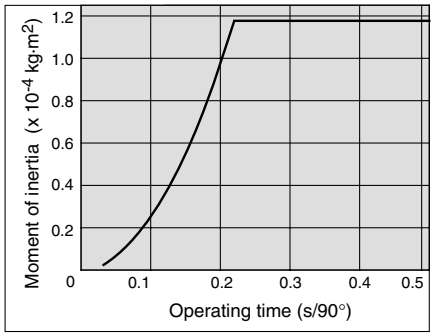

MHW2-20D

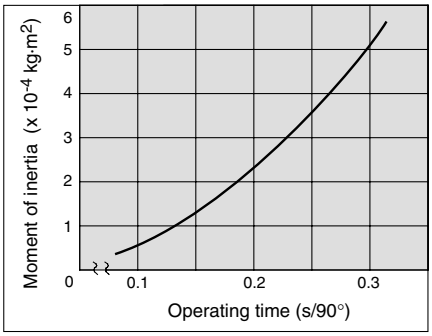

MHW2-50D

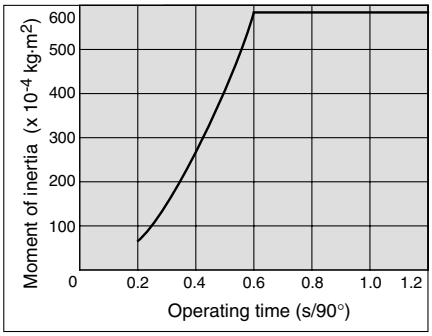

MHY2-16D

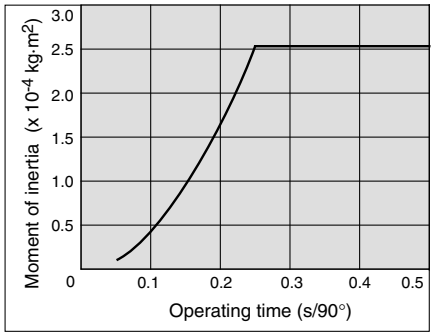

MHW2-25D

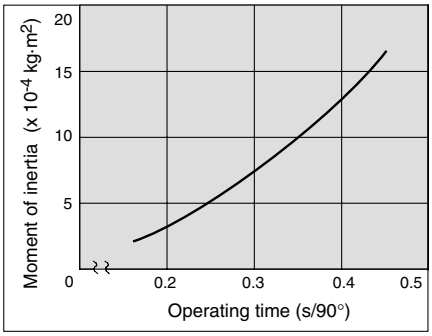

MHY2-20D

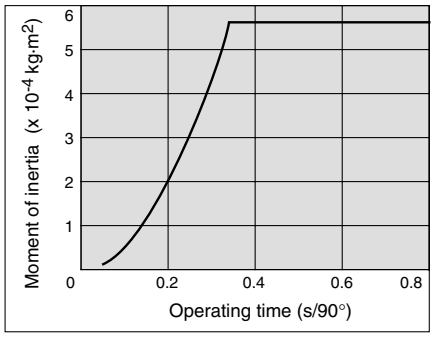

MHW2-32D

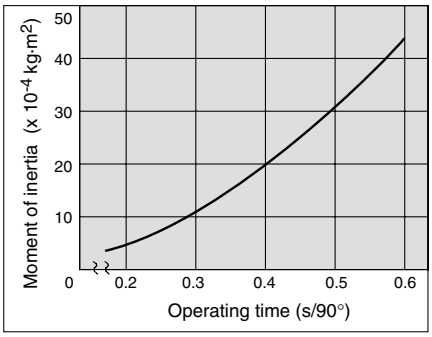

MHY2-25D

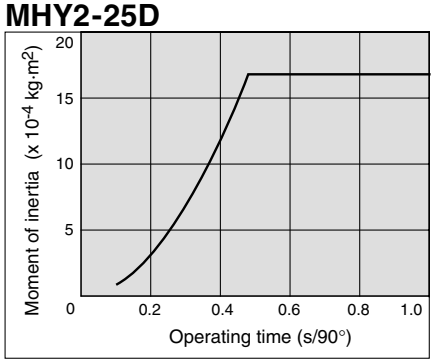

MHW2-40D

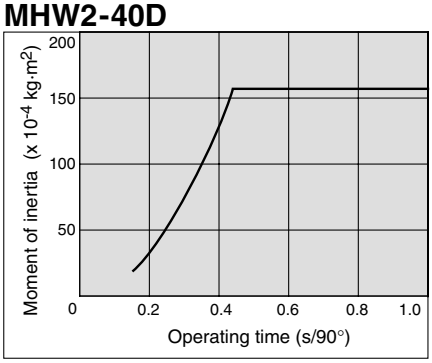

180° Angular Style Air Gripper
Cam Style
Series MHY2
ø10, ø16, ø20, ø25

How to Order

MHY 2 – 16 D 2 – M9BW □ – □

Number of fingers

2	2 fingers

Bore size

10	10 mm
16	16 mm
20	20 mm
25	25 mm

Action

D	Double acting

Finger option

Nil: Standard tapped mounting

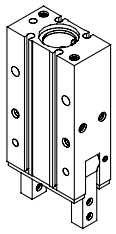

2: Through-holes in opening/closing direction

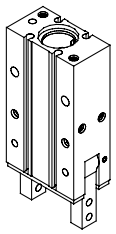

Auto switch

Nil	Without auto switch (Built-in magnet)

∗For the applicable auto switch model, refer to the table below.

Number of auto switches

Nil	2 pcs.
S	1 pc.
n	n pc.

Made to Order
Refer to page 663 for details.

Applicable Auto Switch / Refer to pages 761 to 809 for further information on auto switches.

Type	Special function	Electrical entry	Indicator light	Wiring (Output)	Load voltage DC	Load voltage DC	Load voltage AC	Auto switch model: Electrical entry direction: Perpendicular	Auto switch model: Electrical entry direction: In-line	Lead wire length (m)∗ 0.5 (Nil)	1 (M)	3 (L)	5 (Z)	Pre-wired connector	Applicable load	
Solid state switch	——	Grommet	Yes	3-wire(NPN)	24 V	5 V, 12 V	—	M9NV	M9N	●	●	●	○	○	IC circuit	Relay, PLC
				3-wire(PNP)				M9PV	M9P	●	●	●	○	○		
				2-wire		12 V		M9BV	M9B	●	●	●	○	○	—	
	Diagnosis (2-color indication)			3-wire(NPN)		5 V, 12 V		M9NWV	M9NW	●	●	●	○	○	IC circuit	
				3-wire(PNP)				M9PWV	M9PW	●	●	●	○	○		
				2-wire		12 V		M9BWV	M9BW	●	●	●	○	○	—	

∗ Lead wire length symbols: 0.5 m ····· Nil (Example) M9NW
1 m ····· M (Example) M9NWM
3 m ····· L (Example) M9NWL
5 m ····· Z (Example) M9NWZ

∗ Auto switches marked with a "○" symbol are produced upon receipt of order.

Note 1) Take note of hysteresis with 2-color indication type switches.
Refer to page 678 for detailed auto switch specifications.

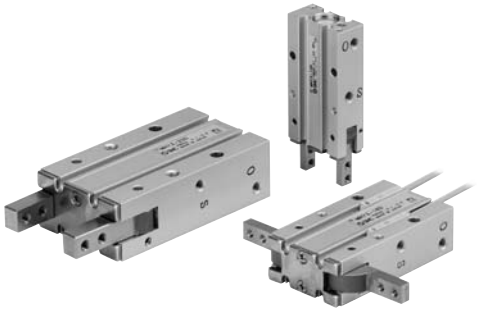

JIS Symbol

Double acting

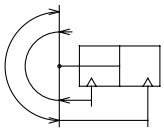

Specifications

Fluid	Air
Operating pressure	0.1 to 0.6 MPa
Ambient and fluid temperature	–10 to 60°C
Repeatability	±0.2 mm
Max. operating frequency	60 c.p.m.
Lubrication	Not required
Action	Double acting
Auto switch (Option) Note)	Solid state auto switch (3-wire, 2-wire)

Note) Refer to pages 761 to 809 for further information on auto switches.

Model

Model	Bore size (mm)	Effective gripping force (1) (N·m)	Opening/Closing angle (Both sides)		Mass (2) (g)
			Opening side	Closing side	
MHY2-10D	10	0.16	180°	-3°	70
MHY2-16D	16	0.54			150
MHY2-20D	20	1.10			320
MHY2-25D	25	2.28			560

Note 1) At the pressure of 0.5 MPa
Note 2) Except auto switch

- Refer to "How to Select the Applicable Model" on page 658.
- Refer to pages 658 and 659 for the details on effective holding force and allowable overhanging distance.

Made to Order

Made to Order
(Refer to pages 683 to 713 for details.)

Symbol	Specifications/Description
-X4	Heat resistance (100°C)
-X5	Fluororubber seal
-X50	Without magnet
-X53	EPDM for seals, Fluorine grease
-X63	Fluorine grease
-X79	Grease for food

Construction

Closed condition

ø10

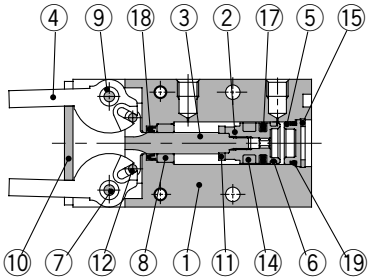

ø16

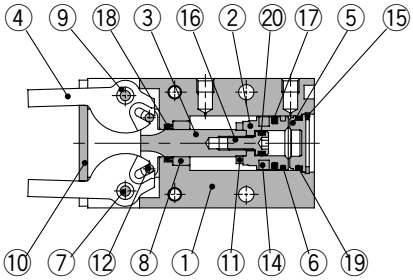

ø20, ø25

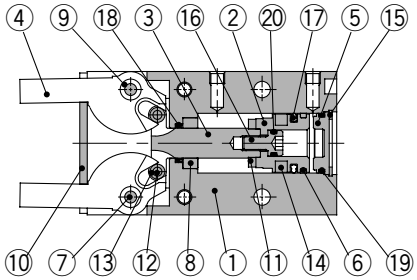

Open condition

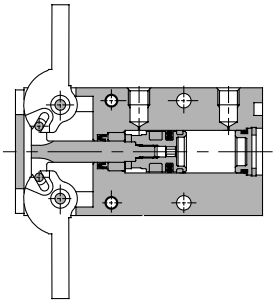

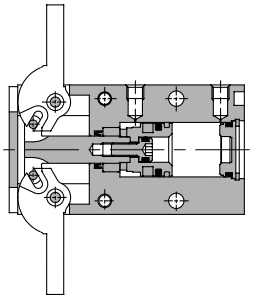

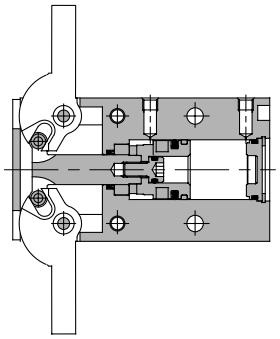

Component Parts

No.	Description	Material	Note
①	**Body**	Aluminum alloy	Hard anodized
②	**Piston**	ø10: Stainless steel ø16 to 25: Aluminum alloy	ø16 to 25: Chromated
③	**Joint**	Stainless steel	Heat treated
④	**Finger**	Stainless steel	Heat treated
⑤	**Cap**	Resin	
⑥	**Wear ring**	Resin	
⑦	**Shaft**	Stainless steel	Nitriding
⑧	**Bushing A**	Sintered alloy steel	

No.	Description	Material	Note
⑨	**Bushing B**	Sintered alloy steel	
⑩	**End plate**	Stainless steel	
⑪	**Bumper**	Urethane rubber	
⑫	**Needle roller**	High carbon chrome bearing steel	
⑬	**Joint roller**	Carbon steel	Nitriding
⑭	**Rubber magnet**	Synthetic rubber	
⑮	**Type C retaining ring**	Carbon steel	Nickel plated
⑯	**Piston bolt**	Stainless steel	

Replacement Parts

Description		MHY2-10D	MHY2-16D	MHY2-20D	MHY2-25D	Main parts
Seal kit		MHY10-PS	MHY16-PS	MHY20-PS	MHY25-PS	<ø10> ⑰⑱⑲⑳ <ø16, ø20, ø25> ⑰⑱⑲⑳
Finger assembly	MHY2-□D	MHY-A1001	MHY-A1601	MHY-A2001	MHY-A2501	④⑨
	MHY2-□D2	MHY-A1001-2	MHY-A1601-2	MHY-A2001-2	MHY-A2501-2	
Joint assembly		MHY-A1002	MHY-A1602	MHY-A2002	MHY-A2502	<ø10, ø16> ③⑫ <ø20, ø25> ③⑫⑬

∗ Order 1 piece of finger assembly per one unit.
Replacement part/grease pack part no. : MH-G04 (30g)

Dimensions

MHY2-10D

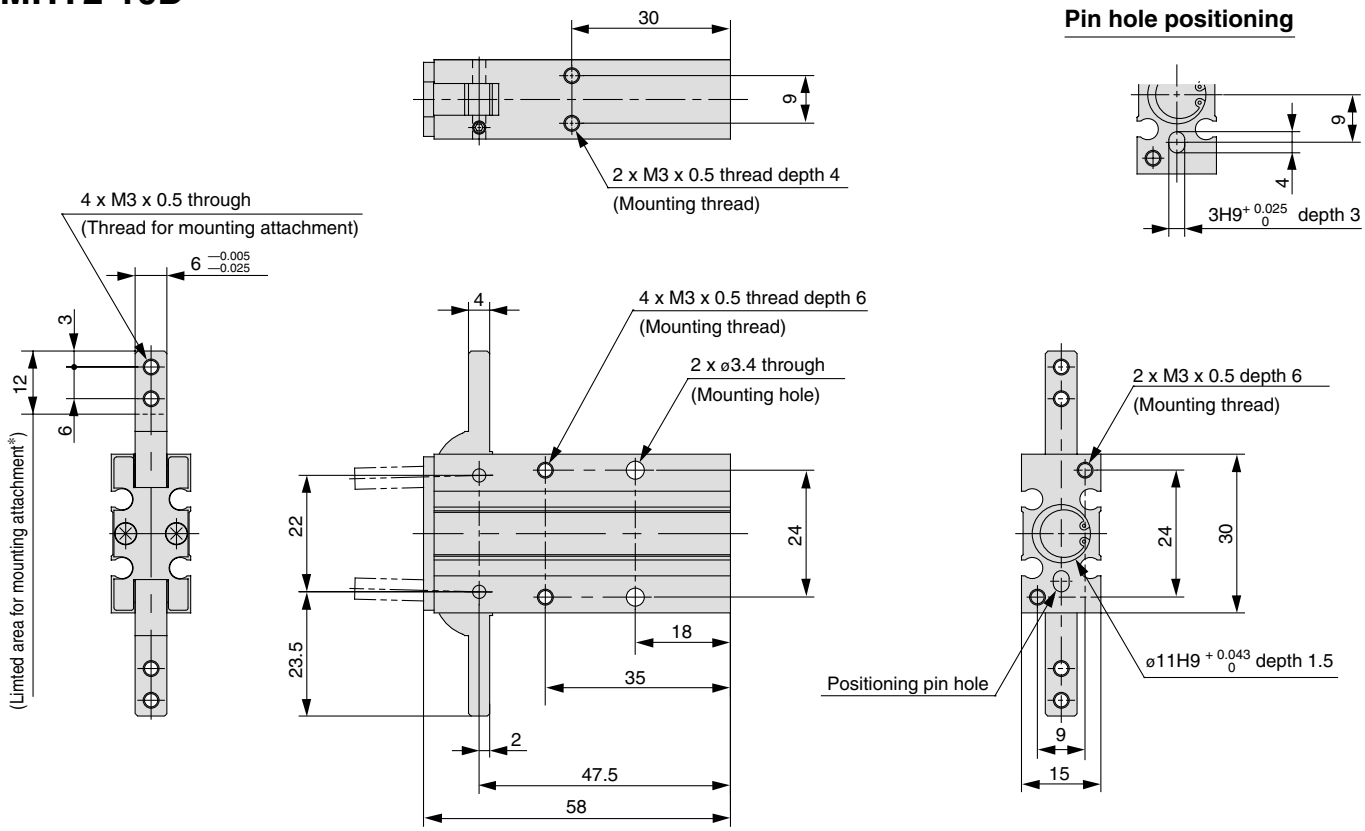

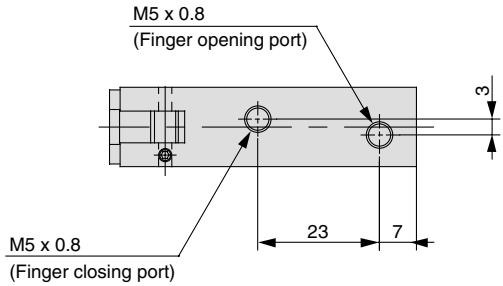

Auto Switch Mounting Groove Dimensions

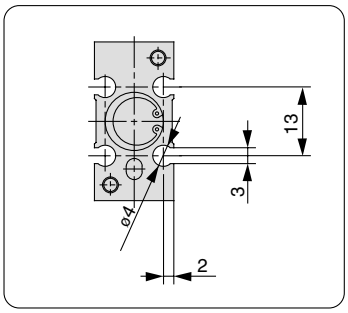

MHY2-10D2

Opening/Closing direction through-hole type

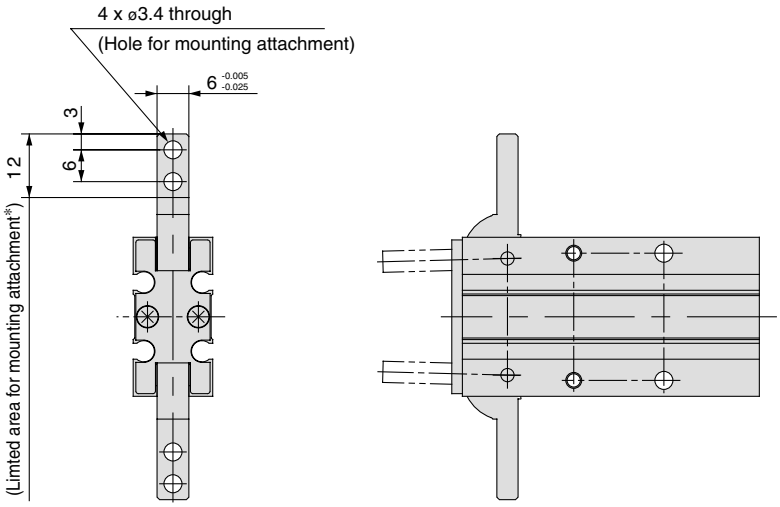

* Do not extend the attachment from limited area for mounting to avoid interference with the attachment or main body.

Dimensions

MHY2-16D

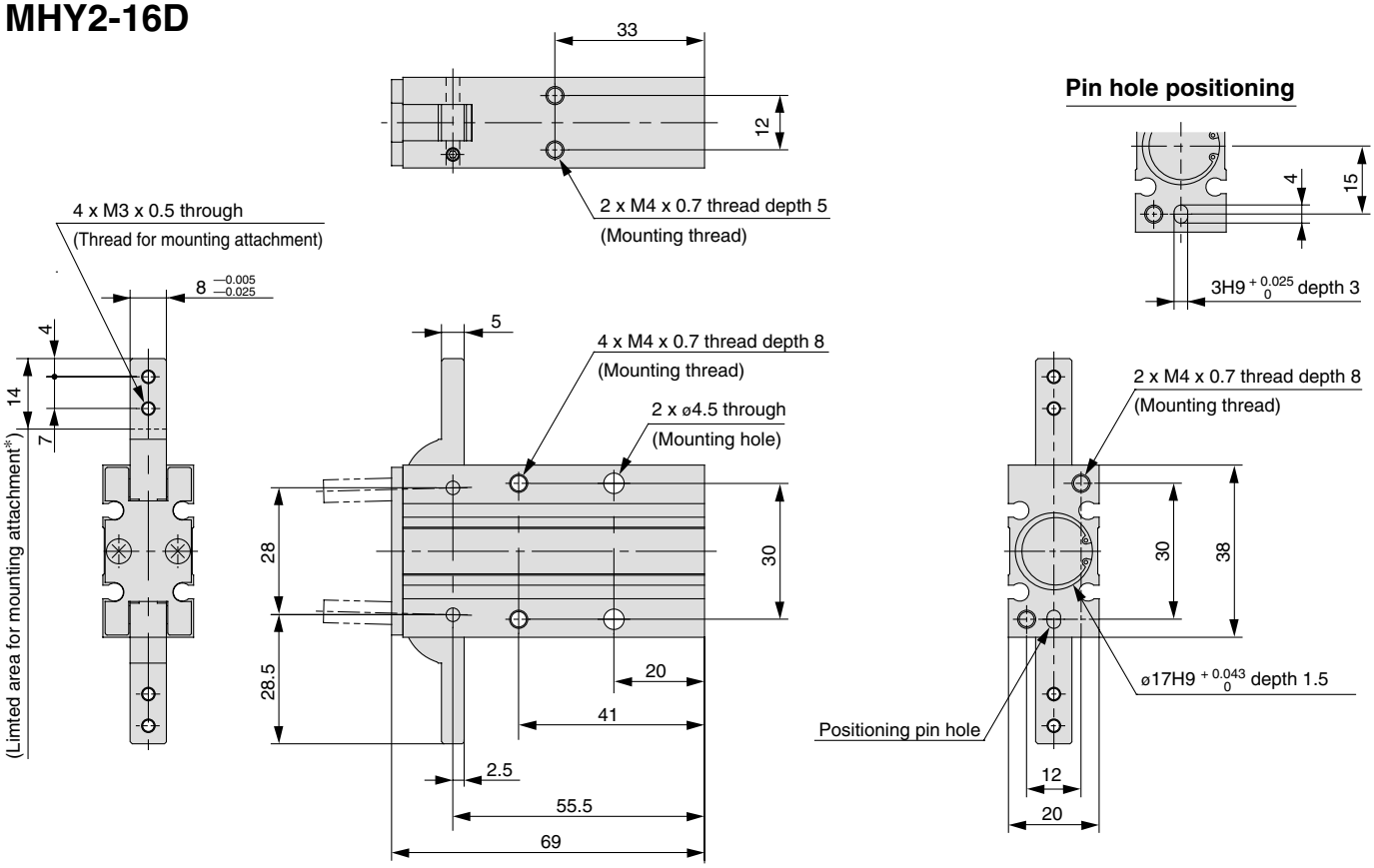

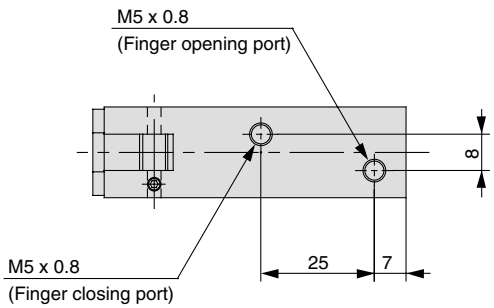

Auto Switch Mounting Groove Dimensions

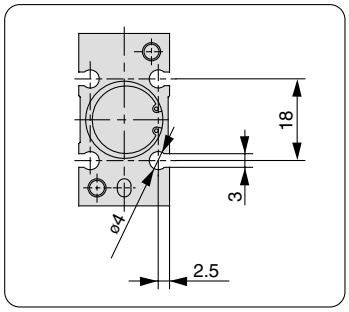

MHY2-16D2

Opening/Closing direction through-hole type

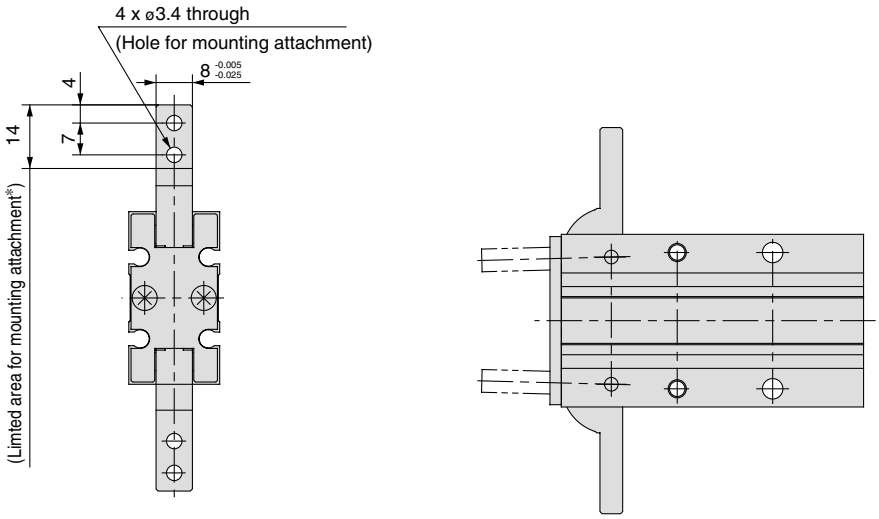

* Do not extend the attachment from limited area for mounting to avoid interference with the attachment or main body.

MHY2-20D

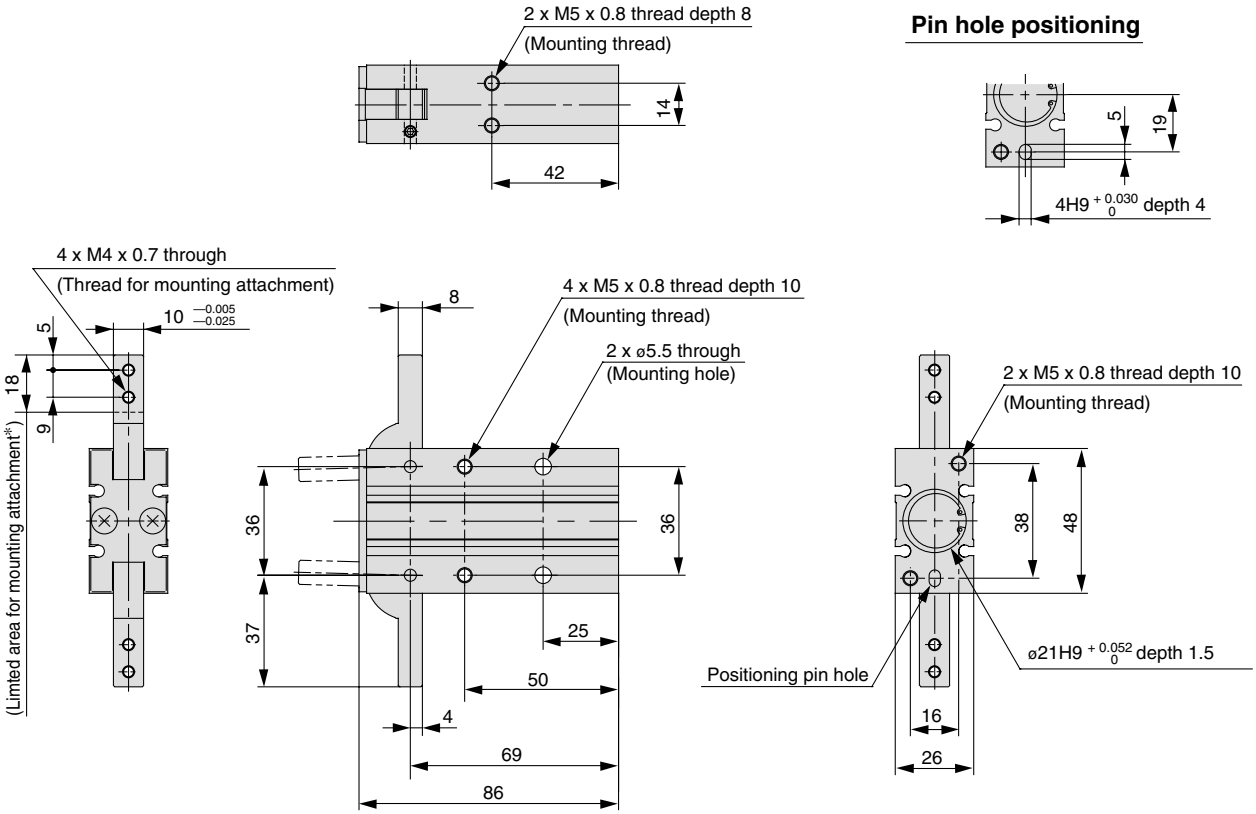

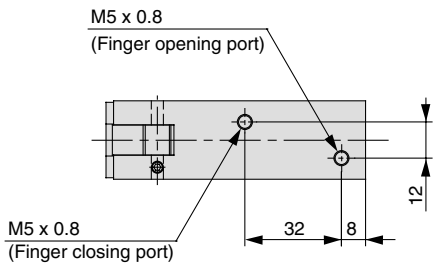

Auto Switch Mounting Groove Dimensions

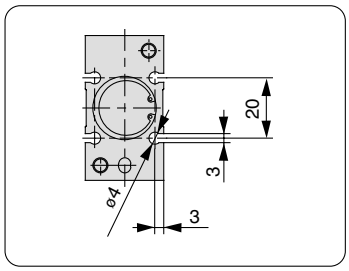

MHY2-20D2

Opening/Closing direction through-hole type

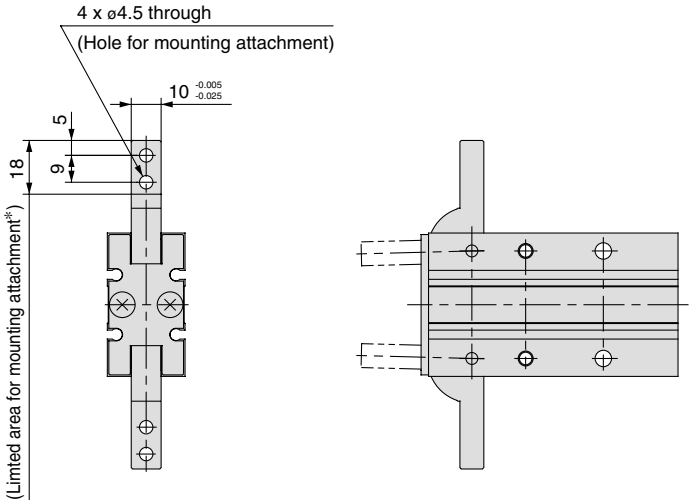

∗ Do not extend the attachment from limited area for mounting to avoid interference with the attachment or main body.

Dimensions

MHY2-25D

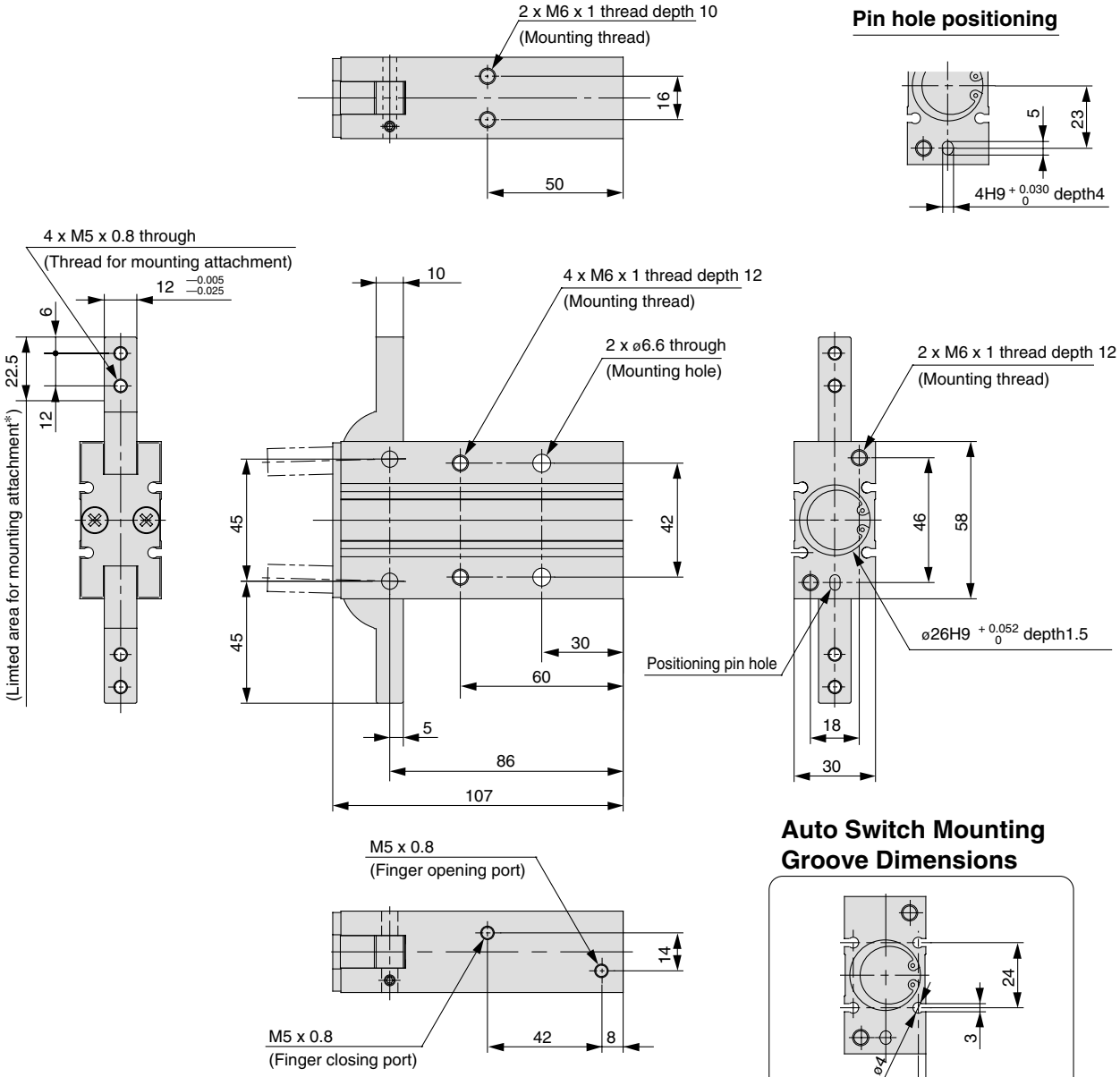

MHY2-25D2

Opening/Closing direction through-hole type

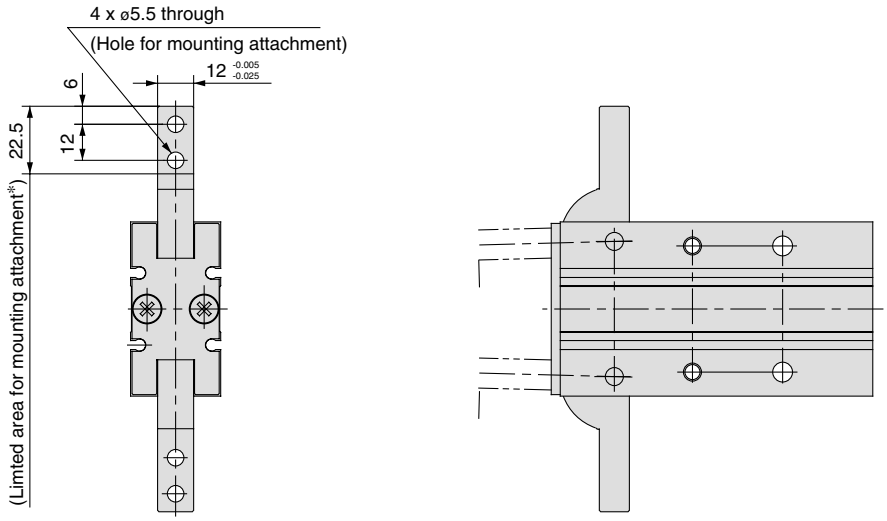

∗ Do not extend the attachment from limited area for mounting to avoid interference with the attachment or main body.

180° Angular Style Air Gripper
Rack & Pinion Style
Series MHW2

ø20, ø25, ø32, ø40, ø50

How to Order

MHW2 – 20 □ D 1 – M9BW □ – □

Number of fingers

2	2 fingers

Bore size

20	20 mm
25	25 mm
32	32 mm
40	40 mm
50	50 mm

Port thread type

Symbol	Type	Size
Nil	M thread	ø20, ø25
	Rc	ø32
TN	NPT	ø40
TF	G	ø50

Action

D	Double acting

Finger option

Nil: Flat type fingers (Standard)

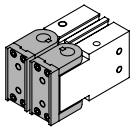

1: Right angle type fingers tapped mounting

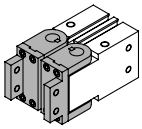

Auto switch

Nil	Without auto switch (Built-in magnet)

∗ For the applicable auto switch model, refer to the table below.

Number of auto switches

Nil	2 pcs.
S	1 pc.
n	n pc.

Made to Order
Refer to page 670 for details.

Applicable Auto Switch
/ Refer to pages 761 to 809 for further information on auto switches.

Type	Special function	Electrical entry	Indicator light	Wiring (Output)	Load voltage DC	Load voltage DC	Load voltage AC	Auto switch model: Electrical entry direction: Perpendicular	Auto switch model: Electrical entry direction: In-line	Lead wire length (m)∗ 0.5 (Nil)	1 (M)	3 (L)	5 (Z)	Pre-wired connector	Applicable load	
Solid state switch	——	Grommet	Yes	3-wire(NPN)	24 V	5 V, 12 V	—	M9NV	M9N	●	●	●	○	○	IC circuit	Relay, PLC
				3-wire(PNP)				M9PV	M9P	●	●	●	○	○		
				2-wire		12 V		M9BV	M9B	●	●	●	○	○	—	
	Diagnosis (2-color indication)			3-wire(NPN)		5 V, 12 V		M9NWV	M9NW	●	●	●	○	○	IC circuit	
				3-wire(PNP)				M9PWV	M9PW	●	●	●	○	○		
				2-wire		12 V		M9BWV	M9BW	●	●	●	○	○	—	

∗ Lead wire length symbols: 0.5 m ····· Nil (Example) M9NW
1 m ····· M (Example) M9NWM
3 m ····· L (Example) M9NWL
5 m ····· Z (Example) M9NWZ

∗ Auto switches marked with a "○" symbol are produced upon receipt of order.

Note 1) Take note of hysteresis with 2-color indication type switches.

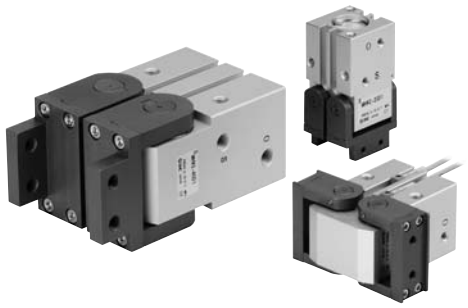

JIS Symbol

Double acting

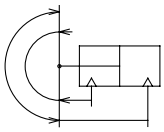

Specifications

Fluid	Air
Operating pressure	0.15 to 0.7 MPa
Ambient and fluid temperature	–10 to 60°C
Repeatability	±0.2 mm
Max. operating frequency	ø20, 25: 60 c.p.m. ø32 to 50: 30 c.p.m.
Lubrication	Not required
Action	Double acting
Auto switch (Option) Note)	Solid state auto switch (3-wire, 2-wire)

Note) Refer to pages 761 to 809 for further information on auto switches.

Model

Model	Bore size (mm)	Effective gripping force (N·m)	Opening angle (Both sides)		Mass (2) (g)
			Opening	Closing	
MHW2-20D	20	0.30	180°	-5°	300
MHW2-20D1					320
MHW2-25D	25	0.73		-6°	510
MHW2-25D1					540
MHW2-32D	32	1.61		-5°	910
MHW2-32D1					950
MHW2-40D	40	3.70		-5°	2140
MHW2-40D1					2270
MHW2-50D	50	8.27		-4°	5100
MHW2-50D1					5350

Note 1) At the pressure of 0.5 MPa
Note 2) Except auto switch

- Refer to "How to Select the Applicable Model" on page 658
- Refer to pages 658 and 659 for the details on effective holding force and allowable overhanging distance.

Made to Order

Made to Order
(Refer to pages 683 to 713 for the details.)

Symbol	Specifications/Description
-X4	Heat resistance
-X5	Fluororubber seal
-X50	Without magnet
-X53	EPDM for seals, Fluorine grease
-X63	Fluorine grease
-X79	Grease for food

⚠ Precautions

Be sure to read before handling.
Refer to front matters 38 and 39 for Safety Instructions and pages 358 to 365 for Air Gripper and Auto Switch Precautions.

Mounting

MHW

⚠ Warning

When using right angle finger tap mounting type, monitor the interference of the bolt with the speed controller.

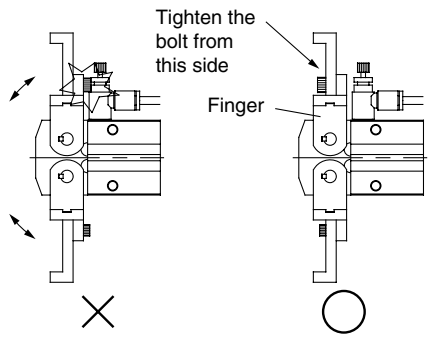

Bolt interferes with speed controller

Construction

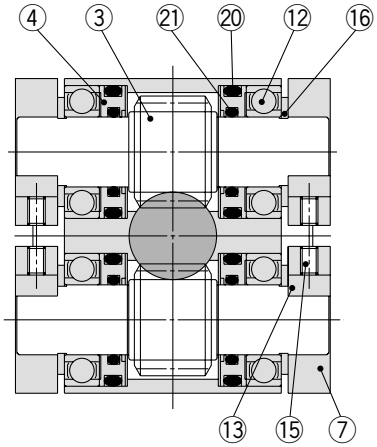

Closed condition

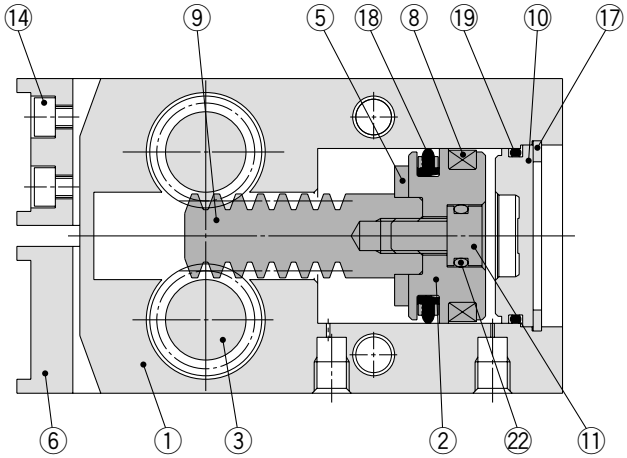

Open condition

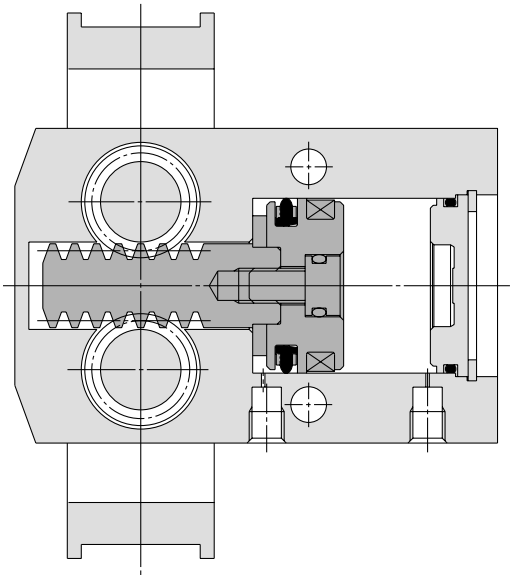

Component Parts

No.	Description	Material	Note
①	**Body**	Aluminum alloy	Hard anodized
②	**Piston**	Aluminum alloy	Hard anodized
③	**Pinion gear**	Carbon steel	Heat treated
④	**Seal cover**	Brass	
⑤	**Bumper**	Urethane rubber	
⑥	**Finger (A)**	Carbon steel	Nitriding
⑦	**Finger (B)**	Carbon steel	Nitriding
⑧	**Rubber magnet**	Synthetic rubber	
⑨	**Rack**	Carbon steel	Nitriding

No.	Description	Material	Note
⑩	**Cap**	ø20, 25: Resin	
		ø32 to 50: Aluminum alloy	Hard anodized
⑪	**Piston bolt**	Stainless steel	
⑫	**Ball bearing**	Carbon steel	Schield type
⑬	**Key**	Carbon steel	
⑭	**Hexagon socket head bolt**	Carbon steel	Nickel plated
⑮	**Hexagon socket cap screw**	Carbon steel	Nickel plated
⑯	**Type C retaining ring**	Carbon steel	Nickel plated
⑰	**Type C retaining ring**	Carbon steel	Nickel plated

Replacement Parts

Description		MHW2-20D	MHW2-25	MHW2-32	MHW2-40	MHW2-50	Main parts
Seal kit		MHW20-PS	MHW25-PS	MHW32-PS	MHW40-PS	MHW50-PS	⑱⑲⑳㉑㉒
Piston assembly		MHW-A2001	MHW-A2501	MHW-A3201	MHW-A4001	MHW-A5001	②⑤⑧⑨⑪㉒
Finger assembly	MHW2-□D	MHW-A2002	MHW-A2502	MHW-A3202	MHW-A4002	MHW-A5002	⑥⑦⑬⑭⑮
	MHW2-□D1	MHW-A2002-1	MHW-A2502-1	MHW-A3202-1	MHW-A4002-1	MHW-A5002-1	

∗ Please order 1 piece finger assembly per one unit.

Replacement part/grease pack part no. :

ø20, 25 : GR-S-005(5g)
ø32 : GR-S-010(10g)
ø40, 50 : GR-S-020(20g)

Dimensions

MHW2-20D

Flat finger type (Standard)

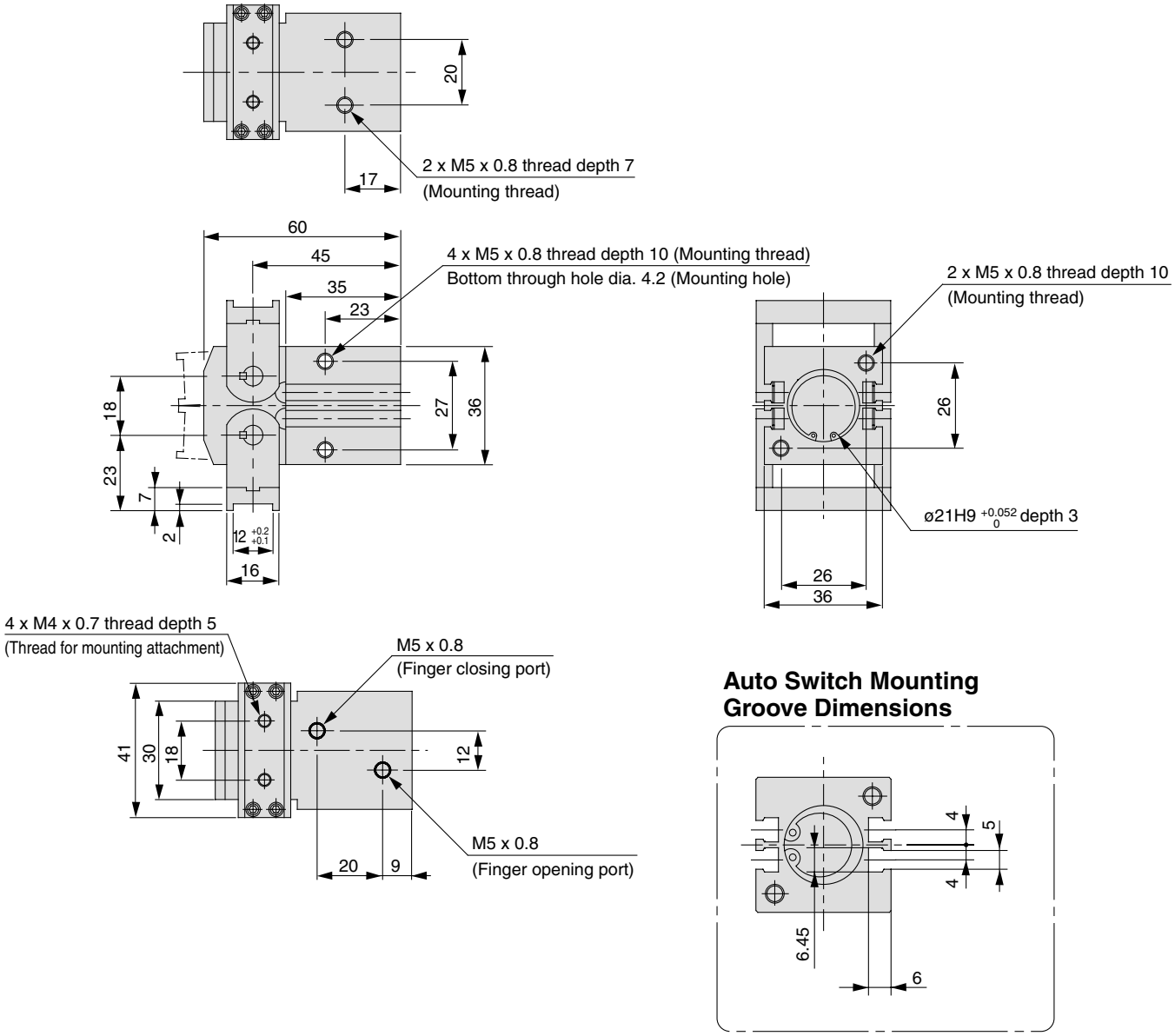

Auto Switch Mounting Groove Dimensions

MHW2-20D1

Right angle finger type

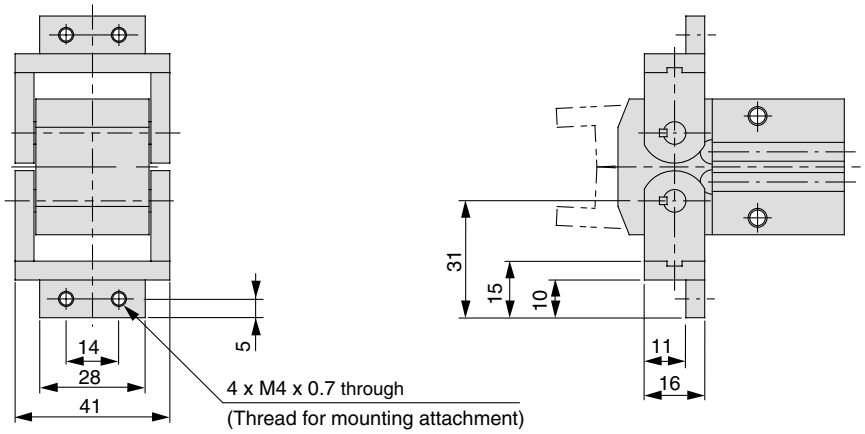

Dimensions

MHW2-25D
Flat finger type (Standard)

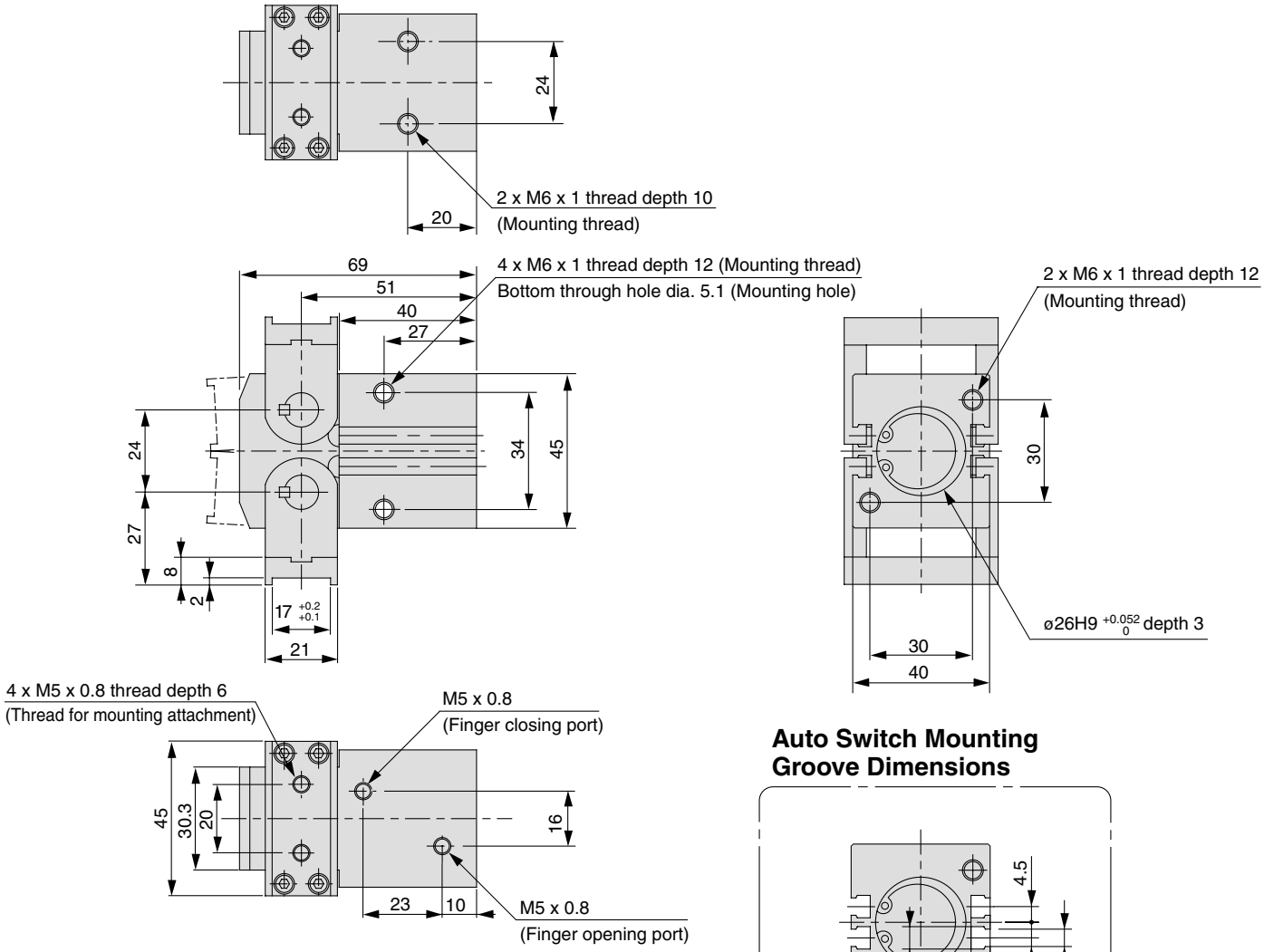

Auto Switch Mounting Groove Dimensions

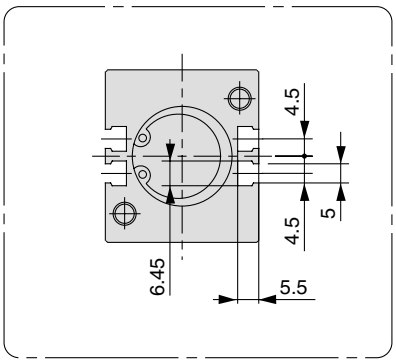

MHW2-25D1
Right angle finger type

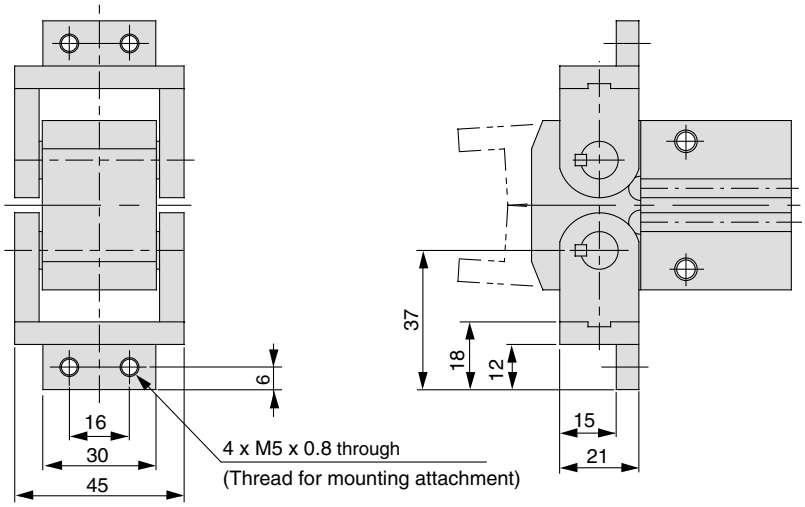

Dimensions

MHW2-32D

Flat finger type (Standard)

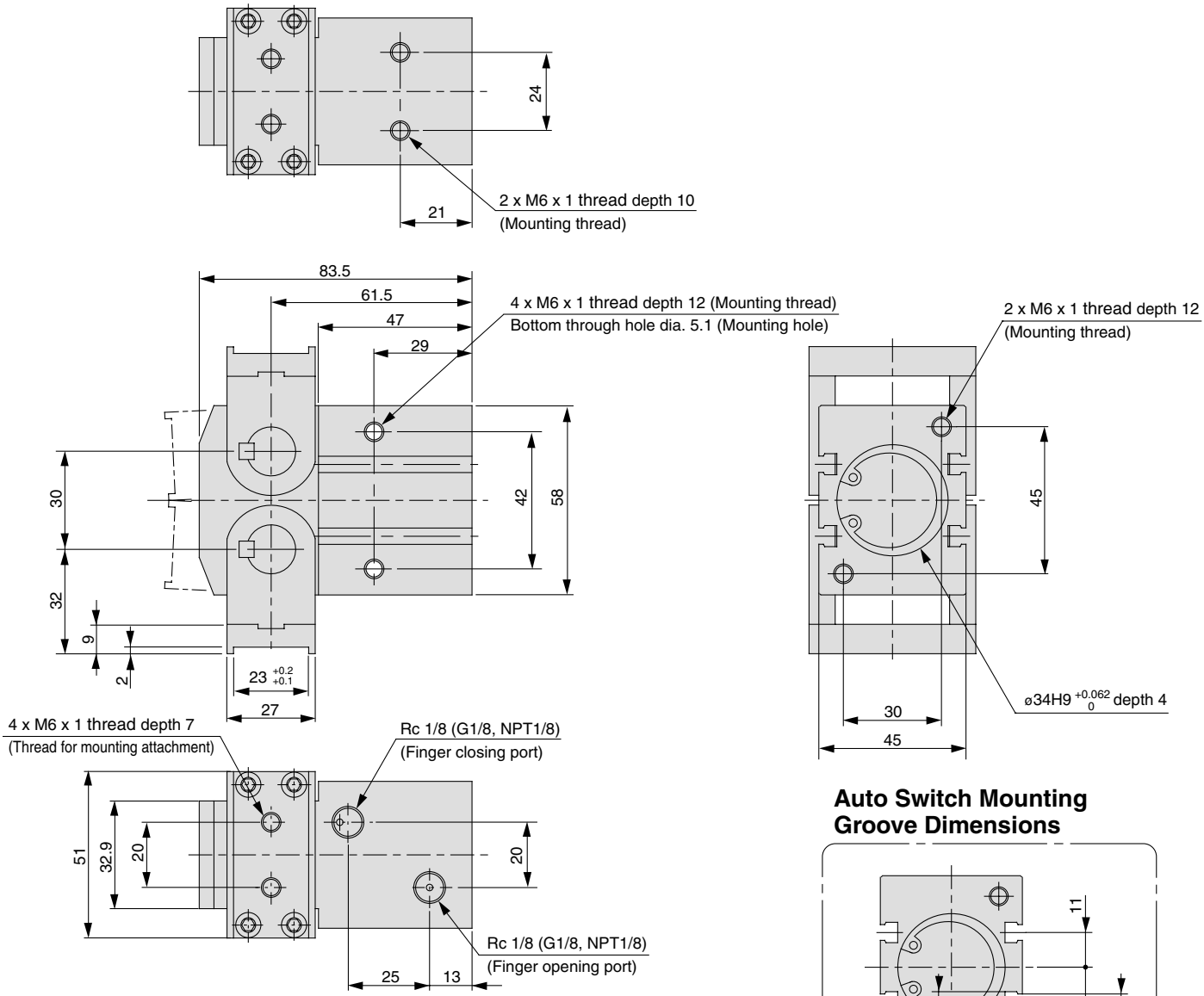

Auto Switch Mounting Groove Dimensions

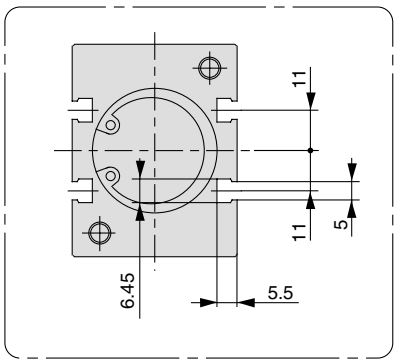

MHW2-32D1

Right angle finger type

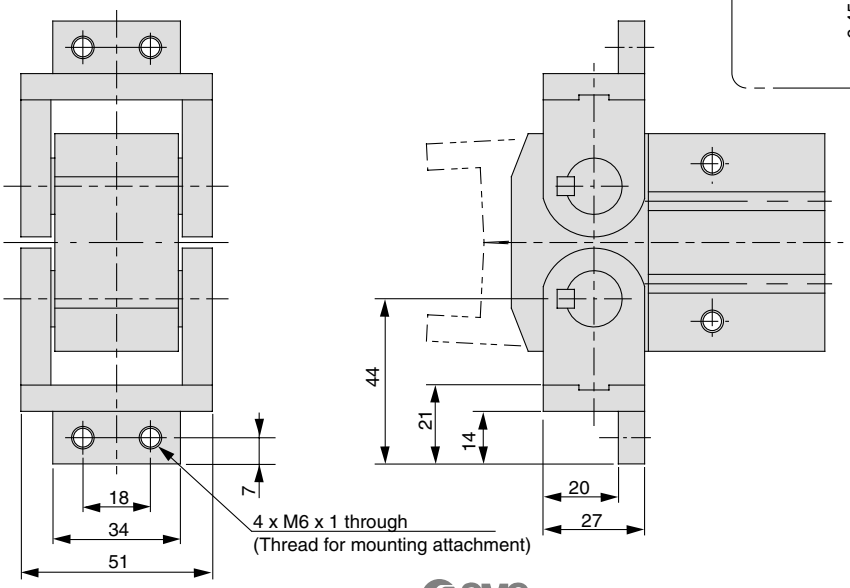

Dimensions

MHW2-40D
Flat finger type (Standard)

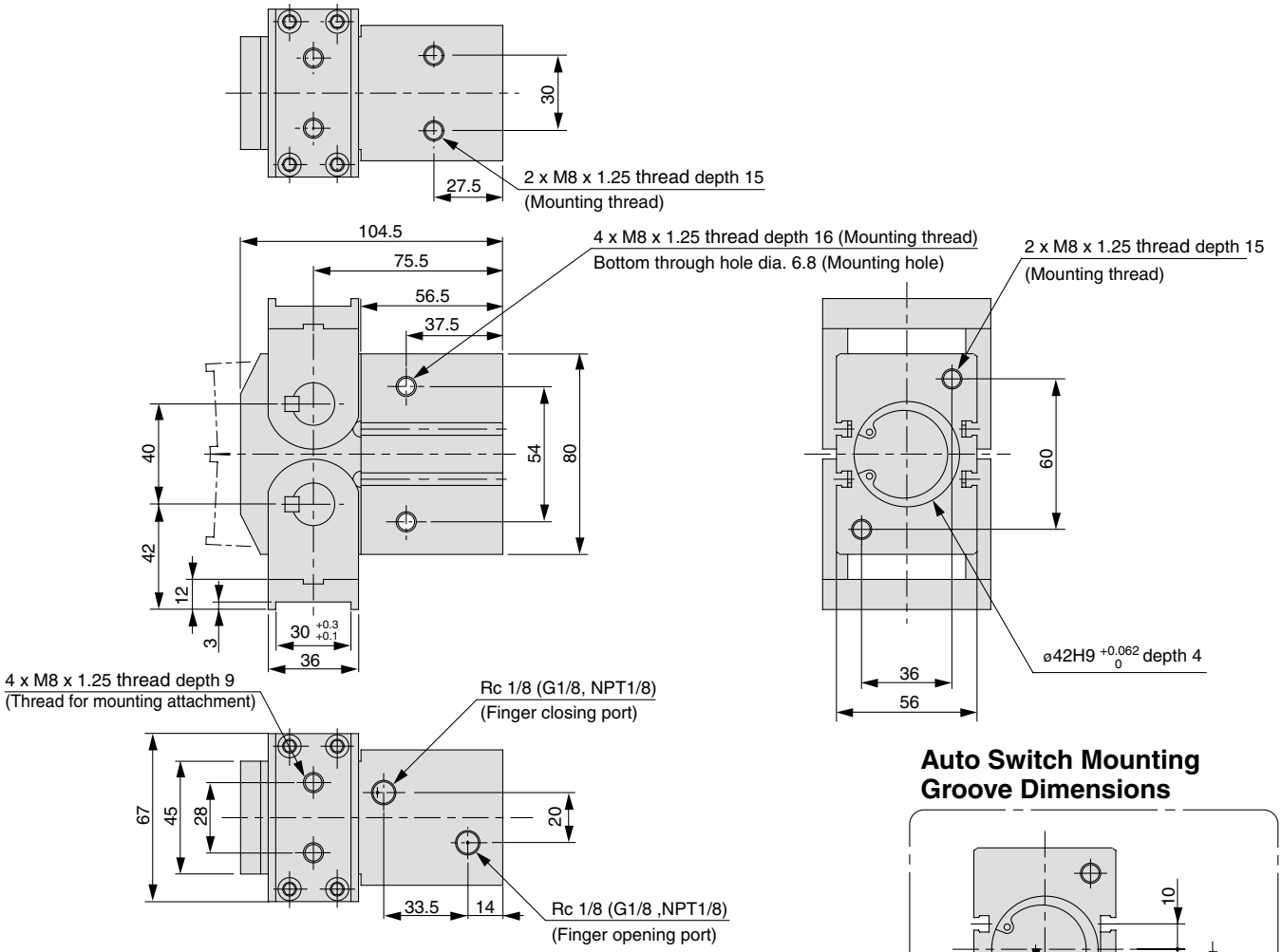

Auto Switch Mounting Groove Dimensions

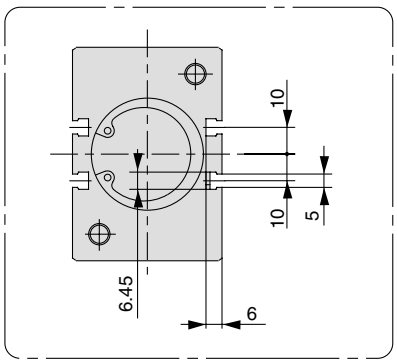

MHW2-40D1
Right angle finger type

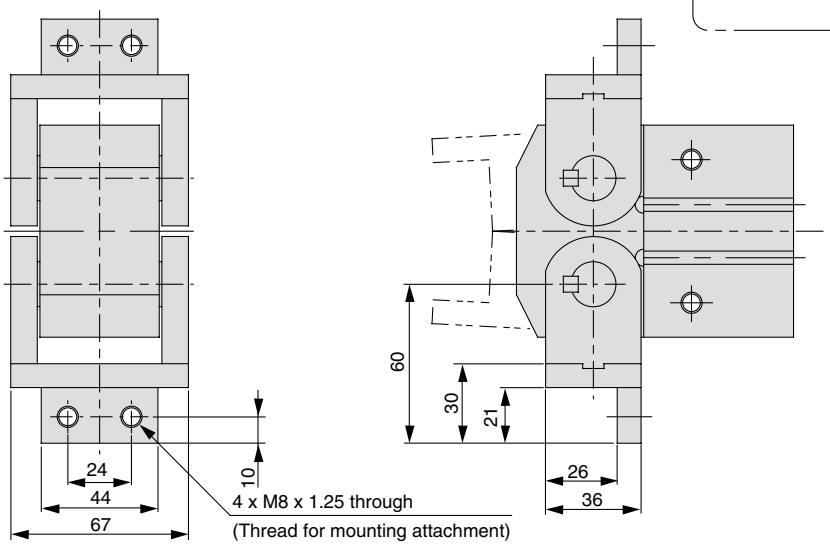

Dimensions

MHW2-50D

Flat finger type (Standard)

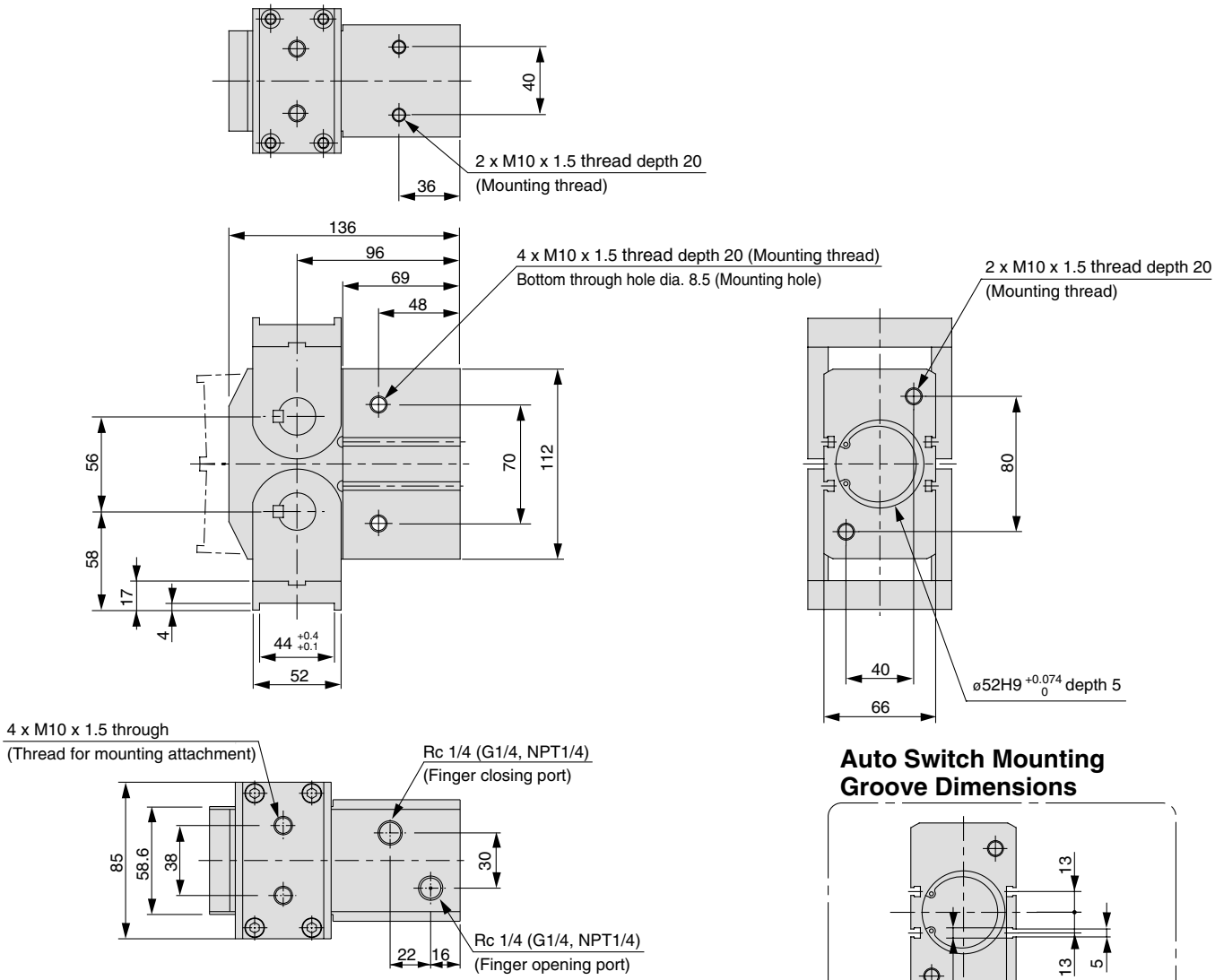

Auto Switch Mounting Groove Dimensions

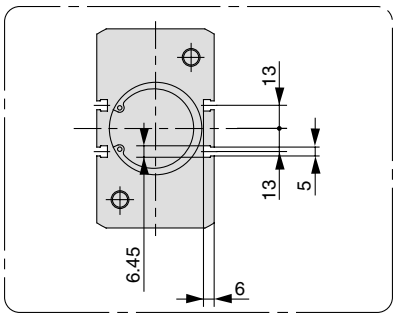

MHW2-50D1

Right angle finger type

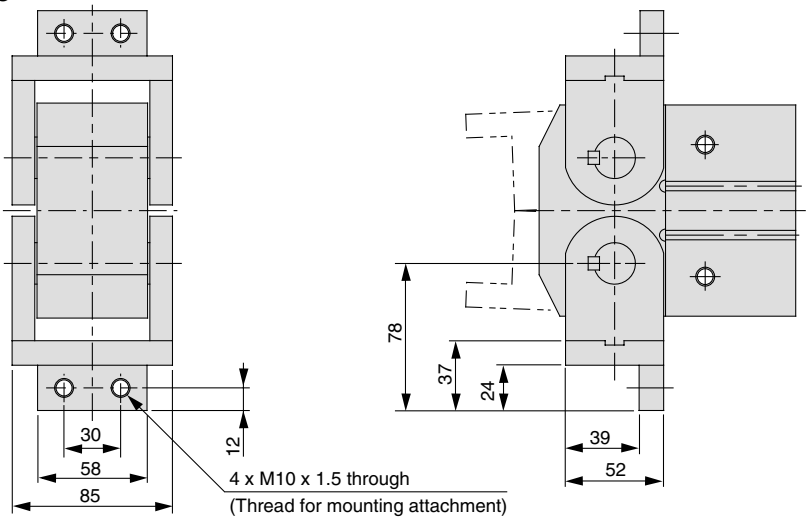

Auto Switch Installation Examples and Mounting Positions

Various auto switch applications are possible through different combinations of auto switch quantities and detecting positions.

Detection when Gripping Exterior of Workpiece

Detection example	1. Confirmation of the fingers in reset position	2. Confirmation of work held
Position to be detected	Position of fingers fully opened 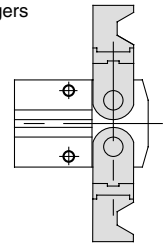	Position when gripping a workpiece 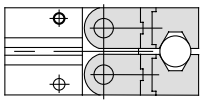
Operation of auto switch	Auto Switch turned ON when fingers return. (Light ON)	Auto Switch turned ON when gripping a workpiece. (Light ON)
How to determine auto switch installation position At no pressure or low pressure, connect the auto switch to a power supply, and follow the directions.	Step 1) Completely open the fingers. 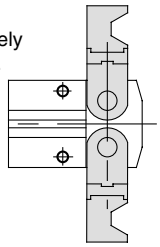	Step 1) Position fingers for gripping a workpiece. 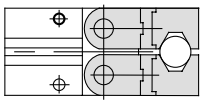
	Step 2) Insert the auto switch into the switch groove in the direction shown in the drawing. 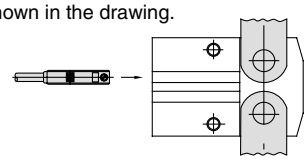	Step 2) Insert the auto switch into the switch groove in the direction shown in the drawing. 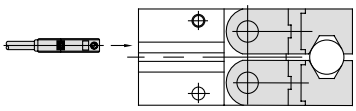
	Step 3) Slide the auto switch in the direction of the arrow until the indicator light illuminates. 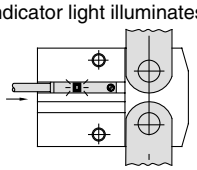 Step 4) Slide the auto switch further in the direction of the arrow until the indicator light goes out. 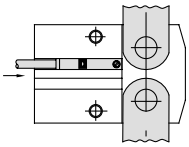 Step 5) Move the auto switch in the opposite direction and fasten until the indicator light illuminates. Move the switch further 0.3 to 0.5 mm In case of 2-color indicator type, fasten it at the location when the indicator light color changes from red to green. 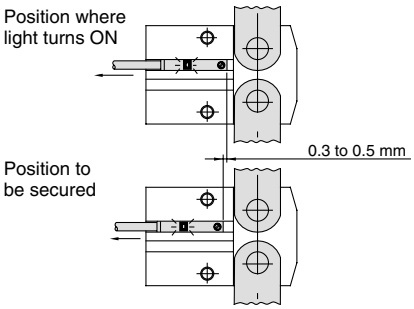	Step 3) Slide the auto switch in the direction of the arrow until the indicator light illuminates. Move the switch further 0.3 to 0.5 mm in the direction of the arrow and fasten it. In the case of 2-color indicator type, fasten it at the location when the indicator light color changes from red to green. 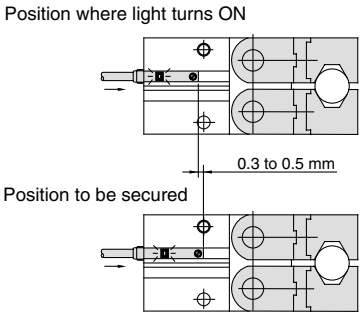

Auto Switch Mounting

To set the auto switch, insert the auto switch into the installation groove of the gripper from the direction indicated in the following drawing. After setting the position, tighten the attached auto switch mounting set screw with a flat head watchmaker's screwdriver.

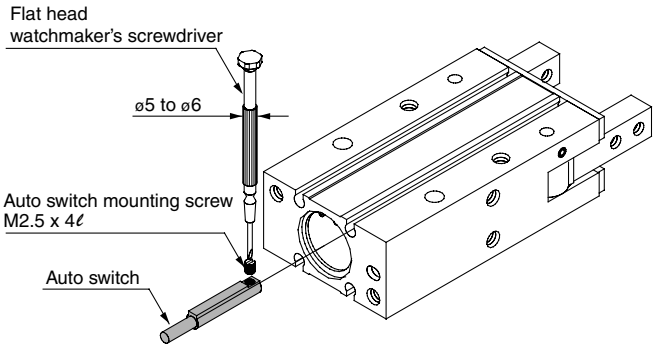

Note) Use a watchmaker's screwdriver with a grip diameter of 5 to 6 mm to tighten the auto switch mounting screw.
The tightening torque should be about 0.05 to 0.15 N·m.

∗ Refer to the page 766 for the details on "Auto Switches Connection and Example".

Auto Switch Hysteresis

Auto switches have hysteresis similar to micro switches. Use the table below as a guide when adjusting auto switch positions, etc.

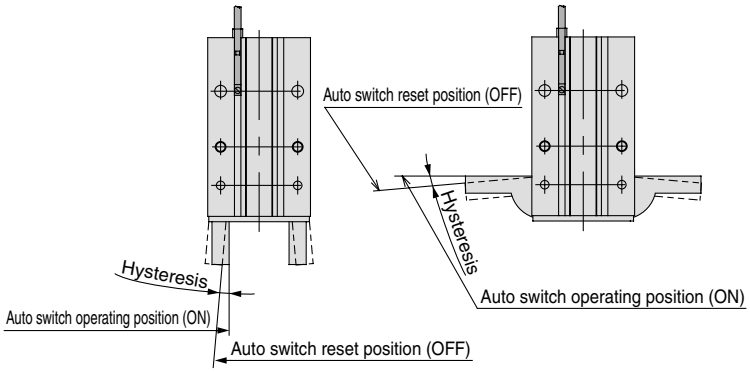

		D-M9□(V)	D-M9□W(V)	
			Red light at ON	Green light at ON
MHY2 -10D	Finger fully closed	2°	2°	4°
	Finger fully open	4°	4°	7°
MHY2 -16D	Finger fully closed	2°	2°	4°
	Finger fully open	3°	3°	6°
MHY2 -20D	Finger fully closed	2°	2°	3°
	Finger fully open	3°	3°	5°
MHY2 -25D	Finger fully closed	1°	1°	3°
	Finger fully open	2°	2°	5°

Protrusion of Auto Switch from Edge of Body

The projection of an auto switch from the edge of the body is shown in the table below. Use the table as a guideline for mounting.

Note) 2-color indicator type and perpendicular entry type protrude in the direction of the lead wire entry.

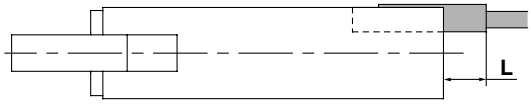

When auto switch D-M9□ is used

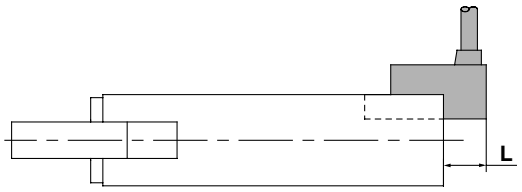

When auto switch D-M9□V is used

Max. Protrusion of Auto Switch from Edge of Body (L)

(mm)

Air gripper model \ Auto switch model		Protrusion In-line D-M9□ D-M9□W	Protrusion Perpendicular D-M9□V D-M9□WV
MHY2-10D	O	—	—
	S	3	1
MHY2-16D	O	—	—
	S	3	1
MHY2-20D	O	—	—
	S	—	—
MHY2-25D	O	—	—
	S	—	—

Auto Switch Mounting

(1) Insert the auto switch bracket into the installation groove of the gripper as shown below and roughly set it.
(2) Insert the auto switch into the auto switch bracket installation groove.
(3) After confirming the detecting position, tighten the set screws (M2.5) attached to the auto switch and set it.
(4) Be sure to change the detecting position in the state of (2).

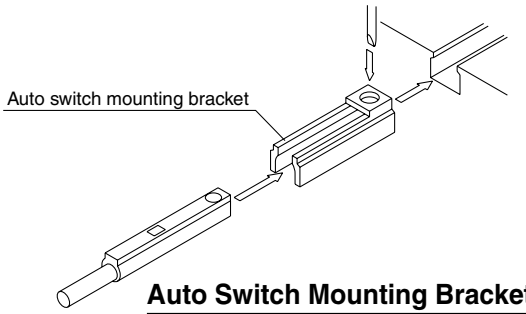

Auto Switch Mounting Bracket: Part No.

Auto switch part no.	Auto switch mounting bracket part no.
D-M9□(V)/M9□W(V)	BMG2-012

Note) Use a screwdriver with a grip diameter of 5 to 6 mm to tighten the set screws (M2.5). The tightening torque should be 0.5 to 1 N•m. As a rule, it should be turned about 90° beyond the point at which tightening can be felt.

Auto Switch Hysteresis

Auto switches have hysteresis similar to micro switches. Use the table below as a guide when adjusting auto switch positions, etc.

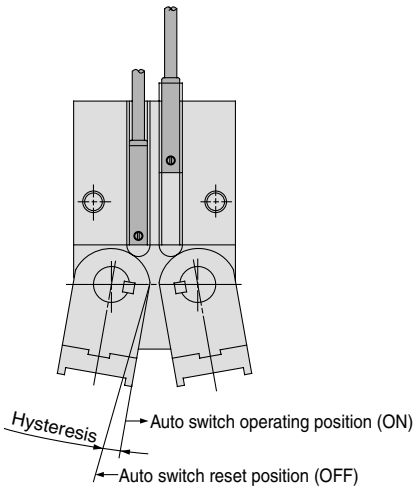

Air gripper model \ Auto switch model	D-Y59□/Y69□ D-Y7P(V)/Y7□W(V)
MHW2-20D	4°
MHW2-25D	4°
MHW2-32D	2°
MHW2-40D	2°
MHW2-50D	2°

Air gripper model \ Auto switch model	Max. hysteresis (Max. value) D-M9□(V) D-M9□W(V)
MHW2-20D	4°
MHW2-25D	4°
MHW2-32D	2°
MHW2-40D	2°
MHW2-50D	2°

Handling of Mounting Brackets

When auto switch is set on mounting side as shown below, allow at least 2 mm run off space on mounting late since the auto switch is protruded from the gripper edge.

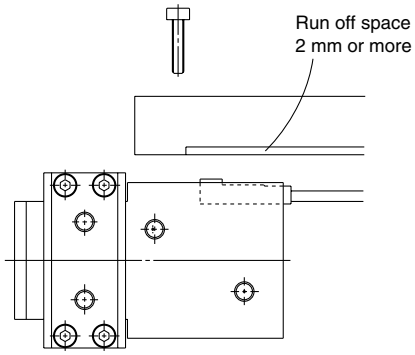

Protrusion of Auto Switch from Edge of Body

The maximum protrusion of an auto switch (when fingers are fully closed) from the edge of the body is shown in the table below. Use the table as a guideline for mounting.

When auto switches D-M9□/M9□W/Y59 A/B D-Y7□, Y7□W are used

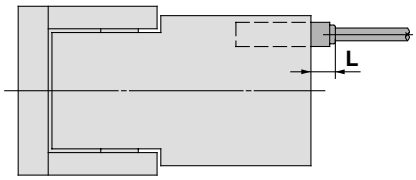

When auto switches D-M9□V/M9□WV/Y69 A/B D-Y7□V, Y7□WV are used

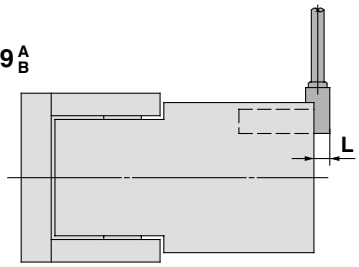

Max. Protrusion of Auto Switch from Edge of Body (L)

(mm)

Air gripper model \ Auto switch model		Protrusion (mm) In-line electrical entry type D-Y59□/Y7P/Y7□W	Protrusion (mm) Perpendicular electrial entry type D-Y69□/Y7PV/Y7□WV
MHW2-20D	O	—	—
	S	7	5
MHW2-25D	O	—	—
	S	7	5
MHW2-32D	O	—	—
	S	4	2
MHW2-40D	O	—	—
	S	3	1
MHW2-50D	O	—	—
	S	1	—

(mm)

Air gripper model \ Auto switch model		Protrusion (mm) In-line electrical entry type D-M9□/M9□W	Protrusion (mm) Perpendicular electrial entry type D-M9□V/M9□WV
MHW2-20D	O	—	—
	S	7	5
MHW2-25D	O	—	—
	S	7	5
MHW2-32D	O	—	—
	S	4	2
MHW2-40D	O	—	—
	S	3	1
MHW2-50D	O	—	—
	S	1	—

Specific Product Precautions 1

Be sure to read before handling.

Mounting Air Grippers/Series MHY2

Possible to mount from 3 directions.

Axial Mounting (Body Tapped)

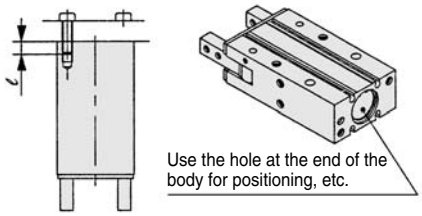

Model	Applicable bolts	Max. tightening torque (N·m)	Max. screw-in depth (ℓmm)
MHY2-10D	M3 x 0.5	0.88	6
MHY2-16D	M4 x 0.7	2.1	8
MHY2-20D	M5 x 0.8	4.3	10
MHY2-25D	M6 x 1	7.4	12

Model	Bore(mm)	Hole depth (mm)
MHY2-10D	ø11H9 $^{+0.043}_{0}$	1.5
MHY2-16D	ø17H9 $^{+0.043}_{0}$	1.5
MHY2-20D	ø21H9 $^{+0.052}_{0}$	1.5
MHY2-25D	ø26H9 $^{+0.052}_{0}$	1.5

Lateral mounting (Body Tapped, Body through-hole)

●Body tapped

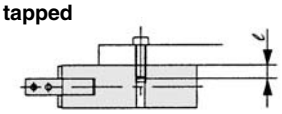

Model	Applicable bolts	Max. tightening torque (N·m)	Max. screw-in depth (ℓmm)
MHY2-10D	M3 x 0.5	0.88	6
MHY2-16D	M4 x 0.7	2.1	8
MHY2-20D	M5 x 0.8	4.3	10
MHY2-25D	M6 x 1	7.4	12

●Body through-hole

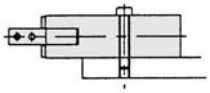

Model	Applicable bolts	Max. tightening torque (N·m)
MHY2-10D	M3 x 0.5	0.88
MHY2-16D	M4 x 0.7	2.1
MHY2-20D	M5 x 0.8	4.3
MHY2-25D	M6 x 1	7.4

Vertical Mounting (Body Tapped)

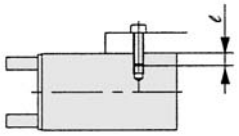

Model	Applicable bolts	Max. tightening torque (N·m)	Max. screw-in depth (ℓmm)
MHY2-10D	M3 x 0.5	0.59	4
MHY2-16D	M4 x 0.7	1.3	5
MHY2-20D	M5 x 0.8	3.3	8
MHY2-25D	M6 x 1	5.9	10

How to Mount the Attachment to the Finger

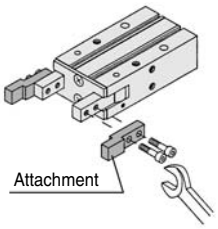

(1) To mount the attachment to the finger, make sure to use a wrench to support the attachment so as not to apply undue strain on the finger.
(2) Refer to the table below for the proper tightening torque on the bolt used for securing the attachment to the finger.

Model	Applicable bolts	Max. tightening torque (N·m)
MHY2-10D	M3 x 0.5	0.59
MHY2-16D		
MHY2-20D	M4 x 0.7	1.4
MHY2-25D	M5 x 0.8	2.8

Specific Product Precautions 2

Be sure to read before handling.

Mounting Air Grippers/Series MHW2

Possible to mount from 3 directions.

Axial Mounting (Body Tapped)

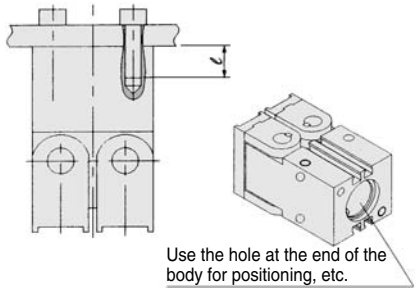

Model	Applicable bolts	Max. tightening torque (N·m)	Max. screw-in depth (ℓmm)
MHW2-20D	M5 x 0.8	4.3	10
MHW2-25D	M6 x 1	7.4	12
MHW2-32D	M6 x 1	7.4	12
MHW2-40D	M8 x 1.25	17.7	15
MHW2-50D	M10 x 1.5	37.2	20

Model	Bore(mm)	Hole depth (mm)
MHW2-20D	ø21H9 $^{+0.052}_{0}$	3
MHW2-25D	ø26H9 $^{+0.052}_{0}$	3
MHW2-32D	ø34H9 $^{+0.062}_{0}$	4
MHW2-40D	ø42H9 $^{+0.062}_{0}$	4
MHW2-50D	ø52H9 $^{+0.074}_{0}$	5

Lateral mounting (Body Tapped, Body through-hole)

●Body tapped

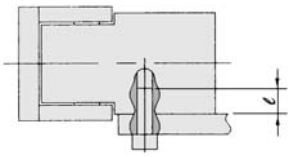

Model	Applicable bolts	Max. tightening torque (N·m)	Max. screw-in depth (ℓmm)
MHW2-20D	M5 x 0.8	4.3	10
MHW2-25D	M6 x 1	7.4	12
MHW2-32D	M6 x 1	7.4	12
MHW2-40D	M8 x 1.25	17.7	16
MHW2-50D	M10 x 1.5	37.2	20

●Body through-hole

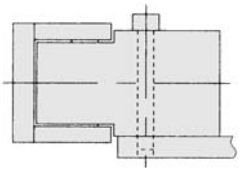

Model	Applicable bolts	Max. tightening torque (N·m)
MHW2-20D	M4 x 0.7	2.1
MHW2-25D	M5 x 0.8	4.3
MHW2-32D	M5 x 0.8	4.3
MHW2-40D	M6 x 1	7.4
MHW2-50D	M8 x 1.25	17.7

Vertical Mounting (Body Tapped)

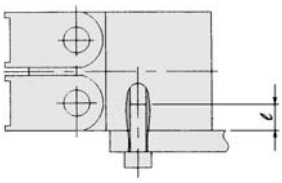

Model	Applicable bolts	Max. tightening torque (N·m)	Max. screw-in depth (ℓmm)
MHW2-20D	M5 x 0.8	2.9	7
MHW2-25D	M6 x 1	5.9	10
MHW2-32D	M6 x 1	5.9	10
MHW2-40D	M8 x 1.25	17.7	15
MHW2-50D	M10 x 1.5	37.2	20

How to Mount the Attachment to the Finger

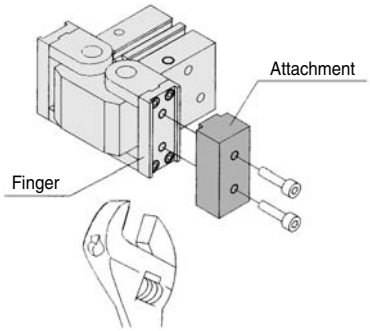

(1) To mount the attachment to the finger, make sure to use a wrench to support the attachment so as not to apply undue strain on the finger.
(2) Refer to the table below for the proper tightening torque on the bolt used for securing the attachment to the finger.

Model	Applicable bolts	Max. tightening torque (N·m)
MHW2-20D	M4 x 0.7	1.4
MHW2-25D	M5 x 0.8	2.5
MHW2-32D	M6 x 1	4.1
MHW2-40D	M8 x 1.25	10.6
MHW2-50D	M10 x 1.5	24.5